STATE OF
NORTH CAROLINA
DEPT. OF TRANSPORTATION
DIVISION OF HIGHWAYS
RALEIGH, N.C.

7-06

ENGLISH STANDARD DRAWING FOR

ARROWS AND SHIELDS

DETAIL OF STATE SHIELDS

1.50" CORNER RADIUS

2.25" CORNER RADIUS

3.00" CORNER RADIUS

24" N.C. SHIELDS

NO. DIGITS	LETTER SERIES	LETTER HIGHT "H"
1	"D"	12"
2	"C" OR "D"	10"
3	"C" OR "D"	7"
3	"C" OR "D"	8"

36" N.C. SHIELDS

NO. DIGITS	LETTER SERIES	LETTER HIGHT "H"
1	"D"	18"
2	"C" OR "D"	15"
3	"C" OR "D"	12"
3	"D"	10"

48" N.C. SHIELDS

NO. DIGITS	LETTER SERIES	LETTER HIGHT "H"
1	"D"	24"
2	"D"	20"
2	"D"	18"
3	"C" OR "D"	14"

DETAIL OF DIAGONAL ARROWS FOR TYPE "D" SIGNS

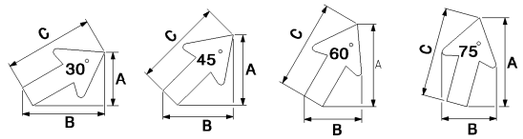

5" ARROW

ANGLE ∡	A	B	C
30°	4.95"	6.96"	7.5"
45°	5.97"	5.97"	7.5"
60°	6.96"	4.95"	7.5"
75°	7.49"	4.95"	7.5"

6" ARROW

ANGLE ∡	A	B	C
30°	5.94"	8.36"	9"
45°	7.16"	7.16"	9"
60°	8.36"	5.94"	9"
75°	8.98"	5.95"	9"

8" ARROW

ANGLE ∡	A	B	C
30°	7.83"	11.14"	12"
45°	9.55"	9.55"	12"
60°	11.14"	7.83"	12"
75°	11.98"	7.88"	12"

10" ARROW

ANGLE ∡	A	B	C
30°	9.79"	13.93"	15"
45°	11.93"	11.93"	15"
60°	13.93"	9.79"	15"
75°	14.97"	9.83"	15"

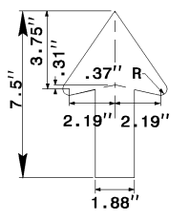

DETAIL OF 5" ARROW

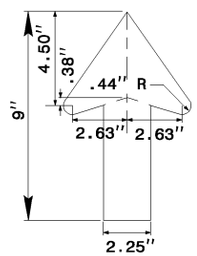

DETAIL OF 6" ARROW

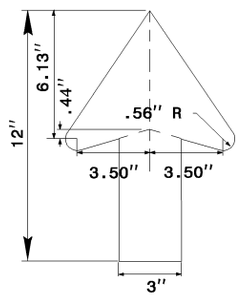

DETAIL OF 8" ARROW

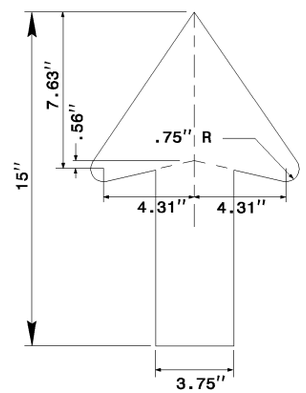

DETAIL OF 10" ARROW

SHEET 2 OF 2

901.50

STATE OF
NORTH CAROLINA
DEPT. OF TRANSPORTATION
DIVISION OF HIGHWAYS
RALEIGH, N.C.

7-06

ENGLISH STANDARD DRAWING FOR

ARROWS AND SHIELDS

SHEET 2 OF 2

901.50