STATE OF
NORTH CAROLINA
DEPT. OF TRANSPORTATION
DIVISION OF HIGHWAYS
RALEIGH, N.C.

7-06

ENGLISH STANDARD DRAWING FOR

SIGN MOUNTING DETAILS

TYPE A AND TYPE B SIGNS

SHEET 1 OF 1

901.80

SIGN SUPPORTS SECTION DIMENSIONS

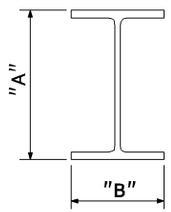

SECTION	A	B
S3 X 5.7	3"	2 3/8"
S4 X 7.7	4"	2 5/8"
S5 X 10	5"	3"
W4 X 13	4 1/8"	4"
W6 X 15	6"	6"
W6 X 20	6 1/4"	6"
W6 X 25	6 3/8"	6"
W8 X 28	8"	6 1/2"
W8 X 35	8 1/8"	8"

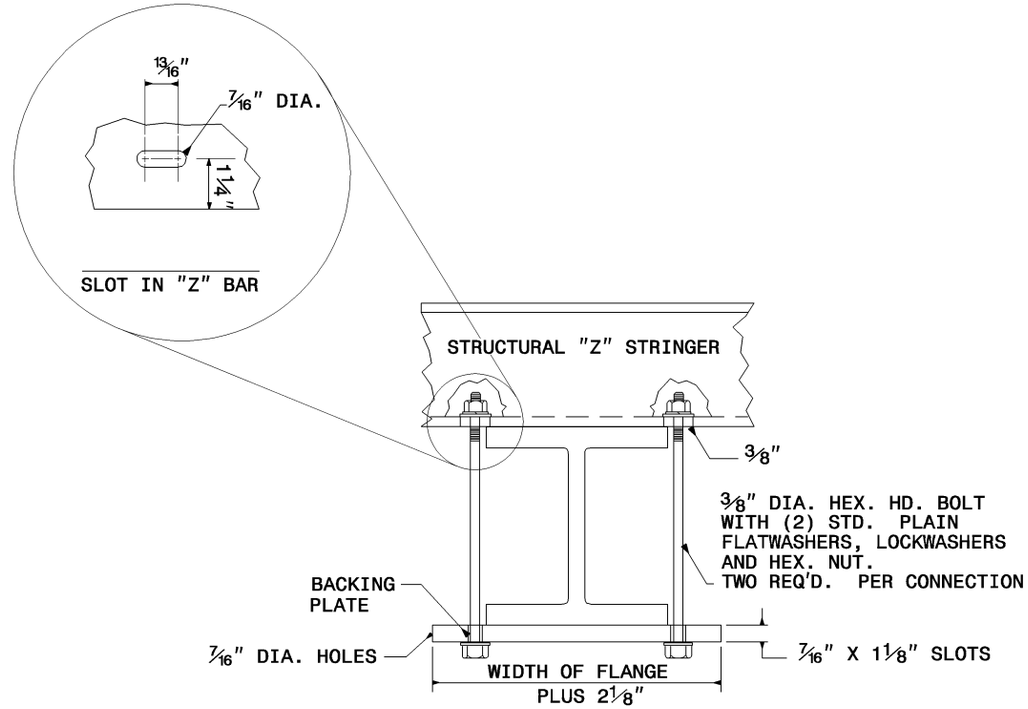

SUPPORT MOUNTING DETAIL

BACKING PLATE
DETAIL

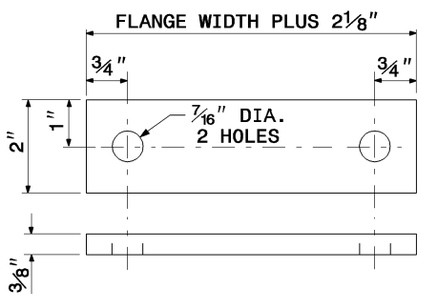

1. THE SUPPORT MOUNTING DETAIL SHOWS A "W" OR "S" BEAM. THIS DETAIL IS ALSO USED FOR MOUNTING SIGNS TO WOOD OR SQUARE TUBE SUPPORTS.
2. USE GALVANIZED STEEL FOR BACKING PLATES AND MOUNTING BOLTS.
3. SEE NCDOT STANDARD SPECIFICATIONS FOR ROADS AND STRUCTURES FOR TYPE OF MATERIAL TO BE USED FOR SIGN HANGER ASSEMBLIES AND SUPPORTS.

STATE OF
NORTH CAROLINA
DEPT. OF TRANSPORTATION
DIVISION OF HIGHWAYS
RALEIGH, N.C.

7-06

ENGLISH STANDARD DRAWING FOR

SIGN MOUNTING DETAILS

TYPE A AND TYPE B SIGNS

SHEET 1 OF 1

901.80