STATE OF
NORTH CAROLINA
DEPT. OF TRANSPORTATION
DIVISION OF HIGHWAYS
RALEIGH, N.C.

7-06

ENGLISH STANDARD DRAWING FOR

GROUND MOUNTED SIGN SUPPORTS

DIM. / SECT.	BASE CONNECTION DATA									HINGE CONNECTION DATA										FOUNDATION DATA					BREAK AWAY SUPPORT WEIGHT CONSTANT LBS.
	BOLT SIZE	A	B	C	D	T_1	W_1	W_2	R	BOLT SIZE	E	F	G	H	J	K	L	T_2	T_3	STUB LENGTH	EMBEDMENT	FOOTING DIAMETER	FOOTING DEPTH	BARS V SIZE	
S3X5.7	N/A	N/A	N/A	N/A	N/A	N/A	N/A	N/A	N/A	N/A	N/A	N/A	N/A	N/A	N/A	N/A	N/A	N/A	N/A	N/A	2' - 8"	1' - 0"	3' - 0"	NO REINF.	N/A
S4X7.7	5/8"DIA.X2 3/4"	8 1/2"	3 1/2"	3/4"	3/4"	3/4"	3/8"	3/16"	11/32"	1/2"DIA.X1 3/4"	2 5/8"	3 1/2"	3"	9/16"	1"	1/2"	1 1/2"	1/4"	1/4"	3' - 6"	3' - 2"	1' - 0"	3' - 6"	NO REINF.	13
S5X10	5/8"DIA.X3 1/4"	9 1/2"	4"	3/4"	3/4"	1"	3/8"	1/4"	11/32"	1/2"DIA X1 3/4"	3"	4"	3 1/2"	9/16"	1"	1/2"	2"	1/4"	1/4"	3' - 0"	2' - 8"	1' - 6"	3' - 0"	NO REINF.	21
W4X13	5/8"DIA.X3 1/2"	8 1/2"	5"	3/4"	3/4"	1"	3/8"	5/16"	11/32"	5/8"DIA.X 2"	4"	5"	4 3/8"	7/8"	1 1/4"	5/8"	2 1/2"	1/4"	3/8"	2' - 3"	1' - 11"	1' - 6"	3' - 6"	#6	25
W6X15	5/8"DIA.X3 1/2"	10 1/2"	7"	3/4"	3/4"	1"	3/8"	1/4"	11/32"	3/4"DIA.X 2"	6"	5"	4 1/2"	1 1/4"	1 1/4"	3/4"	2 1/2"	1/4"	1/2"	2' - 9"	2' - 5"	2' - 0"	4' - 6"	#7	45
W6X20	3/4"DIA.X3 3/4"	11 1/2"	7"	1"	1"	1 1/8"	3/8"	1/4"	13/32"	7/8"DIA.X2 1/2"	6"	6"	5 3/8"	1 1/4"	1 1/2"	7/8"	3"	3/8"	1/2"	2' - 9"	2' - 5"	2' - 0"	5' - 0"	#7	56
W6X25	7/8"DIA.X4 1/4"	12"	7"	1"	1"	1 1/4"	1/2"	5/16"	15/32"	7/8"DIA.X2 1/2"	6"	6"	5 3/8"	1 1/4"	1 1/2"	7/8"	3"	3/8"	1/2"	3' - 3"	2' - 11"	2' - 0"	5' - 6"	#7	62
W8X28	7/8"DIA.X4 1/4"	13 1/2"	7 1/2"	1"	1"	1 1/4"	1/2"	5/16"	15/32"	7/8"DIA.X2 1/2"	6 1/2"	6"	5 3/8"	1 1/4"	1 1/2"	7/8"	3"	3/8"	1/2"	3' - 3"	2' - 11"	2' - 6"	6' - 0"	#9	75
W8X35	1' DIA.X4 3/4"	14"	9"	1 1/4"	1 1/4"	1 3/8"	1/2"	5/16"	17/32"	1"DIA.X2 3/4"	8"	7"	6 1/4"	1 1/4"	1 3/4"	1"	3 1/2"	3/8"	1/2"	3' - 3"	2' - 11"	2' - 6"	7' - 0"	#10	103

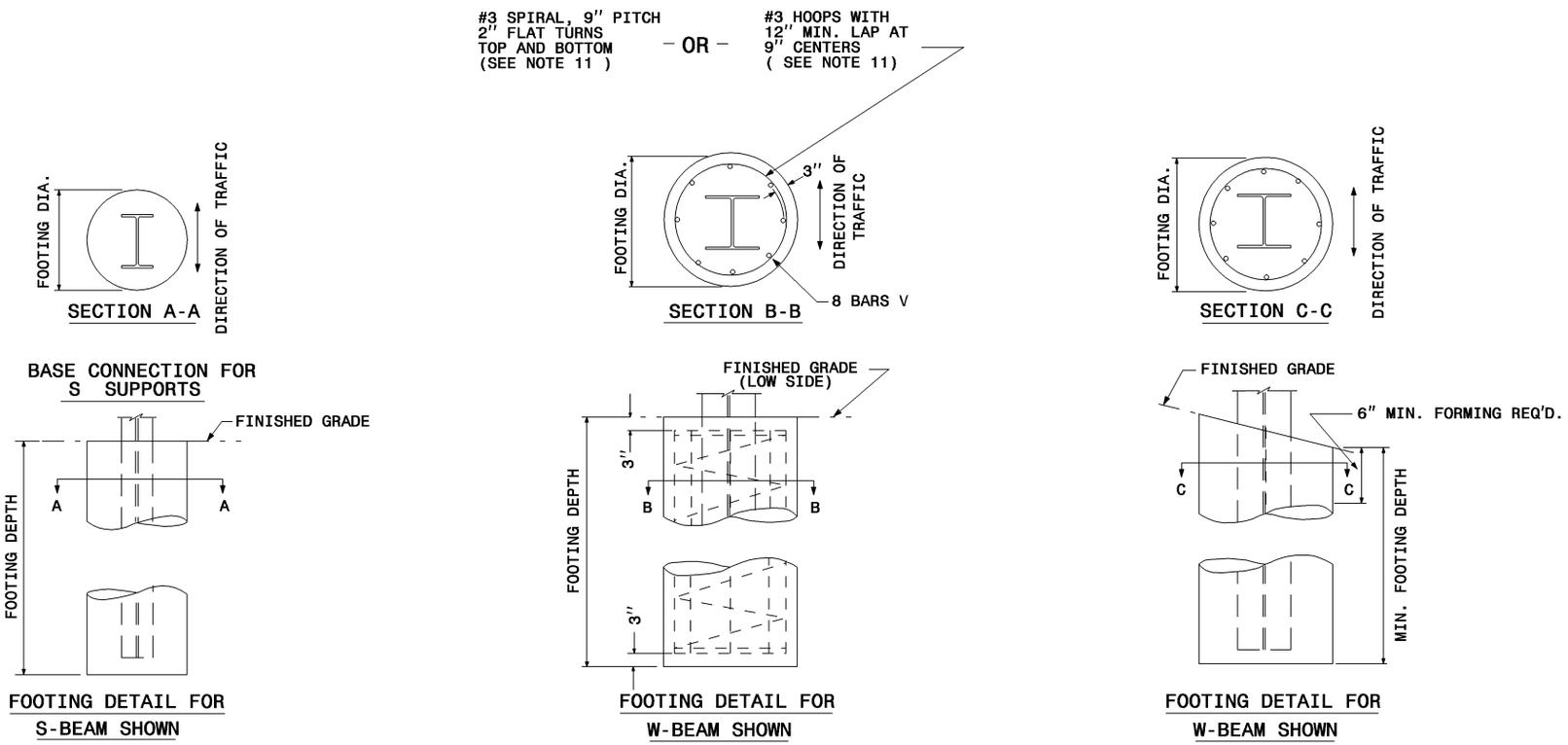

SHEET 2 OF 3

903.10

STATE OF
NORTH CAROLINA
DEPT. OF TRANSPORTATION
DIVISION OF HIGHWAYS
RALEIGH, N.C.

7-06

ENGLISH STANDARD DRAWING FOR

GROUND MOUNTED SIGN SUPPORTS

SHEET 2 OF 3

903.10