STATE OF
NORTH CAROLINA
DEPT. OF TRANSPORTATION
DIVISION OF HIGHWAYS
RALEIGH, N.C.

7-06

ENGLISH STANDARD DRAWING FOR

ORIENTATION OF GROUND MOUNTED SIGNS

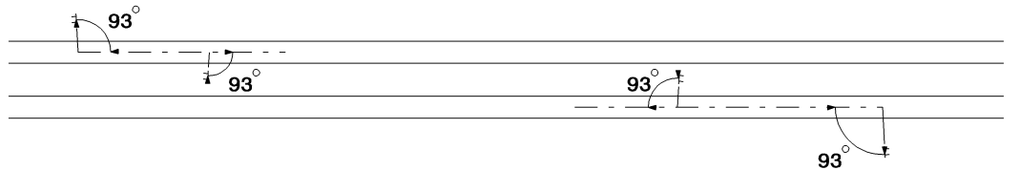

X = (60 FT. PER IN.) (HEIGHT OF LOWER CASE LETTER IN INCHES)
IF SIGN HAS NO LOWER CASE LETTERS, USE HEIGHT OF
UPPER CASE OR CAPITAL LETTERS IN MAJOR LINE OF COPY.

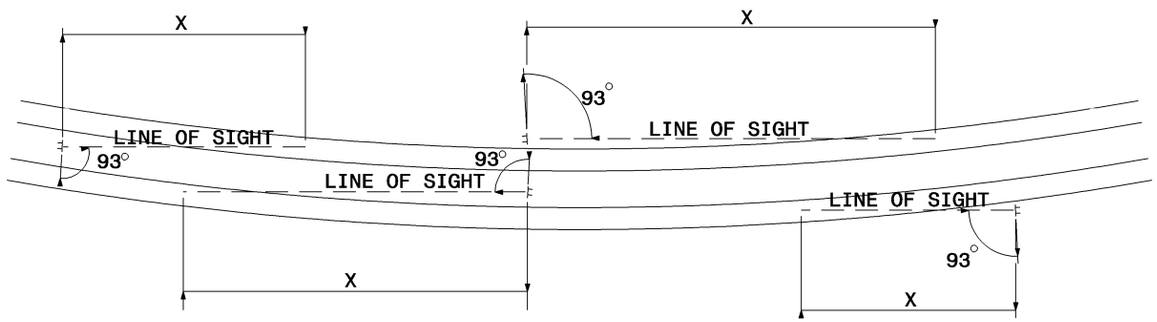

SHEET 1 OF 1

904.10

STATE OF
NORTH CAROLINA
DEPT. OF TRANSPORTATION
DIVISION OF HIGHWAYS
RALEIGH, N.C.

7-06

ENGLISH STANDARD DRAWING FOR

ORIENTATION OF GROUND MOUNTED SIGNS

SHEET 1 OF 1

904.10