STATE OF
NORTH CAROLINA
DEPT. OF TRANSPORTATION
DIVISION OF HIGHWAYS
RALEIGH, N.C.

7-06

ENGLISH STANDARD DRAWING FOR

SECONDARY SIGN MOUNTING

NOTES:

1. FABRICATE VERTICAL AND HORIZONTAL Z'S OF ALUM. Z 3" X 2 11/16 X 1/4" X 2.33 LB/FT.
2. ATTACH VERTICAL Z SUPPORT TO TOP TWO HORIZONTAL STRINGERS ON BACK OF PRIMARY SIGN.
3. DO NOT PERMIT SLOTS IN HORIZONTAL STRINGERS FOR ATTACHMENT OF VERTICAL Z SUPPORTS.

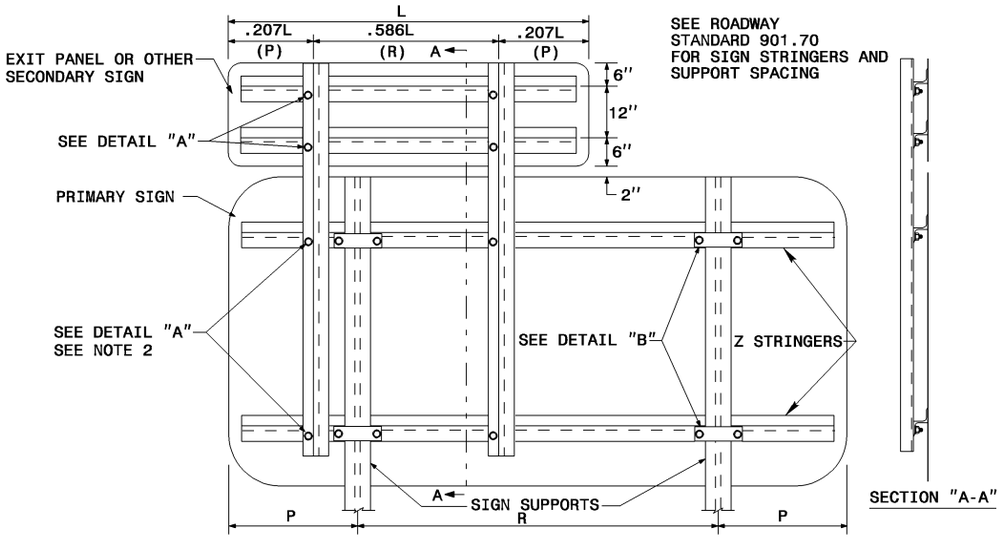

ATTACHMENT METHOD ONE RIGHT (1-R) OR ONE LEFT (1-L)

(EXIT PANEL OR OTHER SECONDARY SIGN ATTACHED TO VERTICAL Z SUPPORTS)

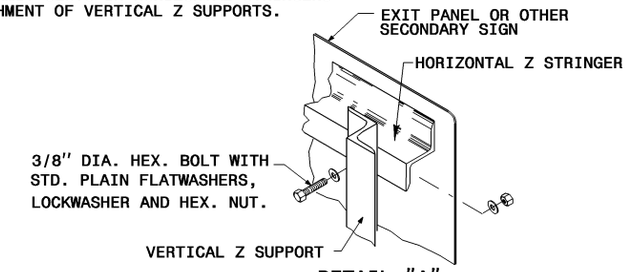

DETAIL "A"

CONNECTION OF HORIZONTAL Z STRINGER AND VERTICAL Z SUPPORT.

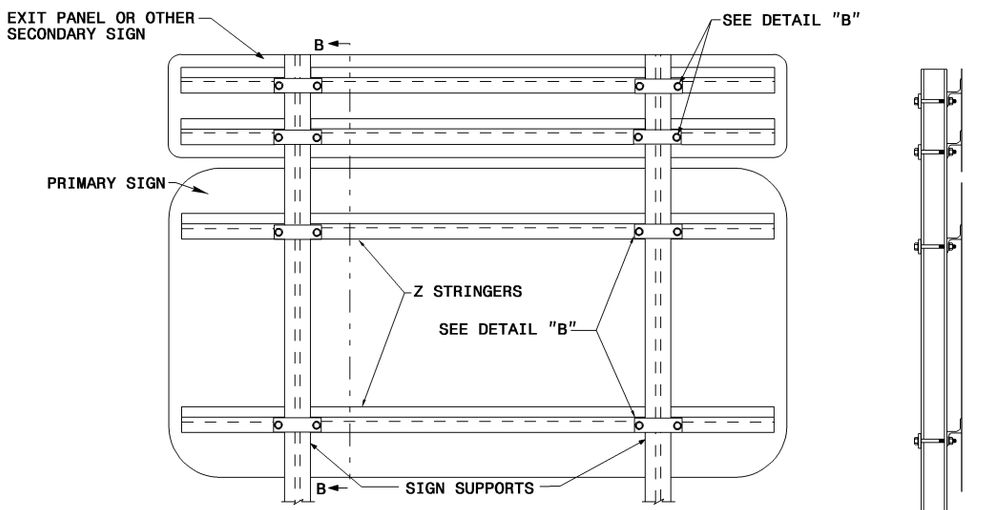

ATTACHMENT METHOD TWO (II)

(EXIT PANEL OR OTHER SECONDARY SIGN ATTACHED TO PRIMARY SIGN SUPPORTS)

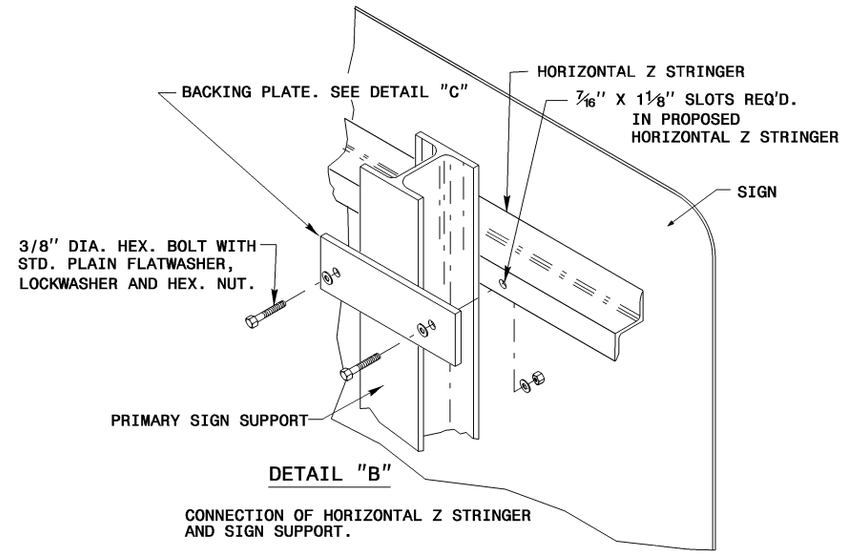

DETAIL "B"

CONNECTION OF HORIZONTAL Z STRINGER AND SIGN SUPPORT.

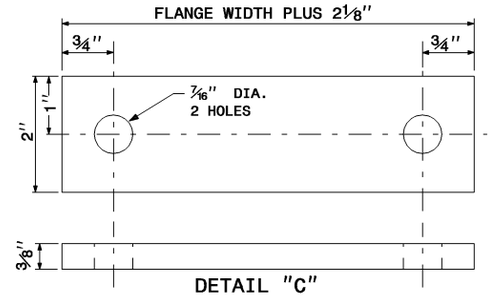

DETAIL "C"

BACKING PLATE

STATE OF
NORTH CAROLINA
DEPT. OF TRANSPORTATION
DIVISION OF HIGHWAYS
RALEIGH, N.C.

7-06

ENGLISH STANDARD DRAWING FOR

SECONDARY SIGN MOUNTING

SHEET 1 OF 1
904.20