STATE OF
NORTH CAROLINA
DEPT. OF TRANSPORTATION
DIVISION OF HIGHWAYS
RALEIGH, N.C.

7-06

ENGLISH STANDARD DRAWING FOR

PORTABLE CONCRETE BARRIER

ANCHORED

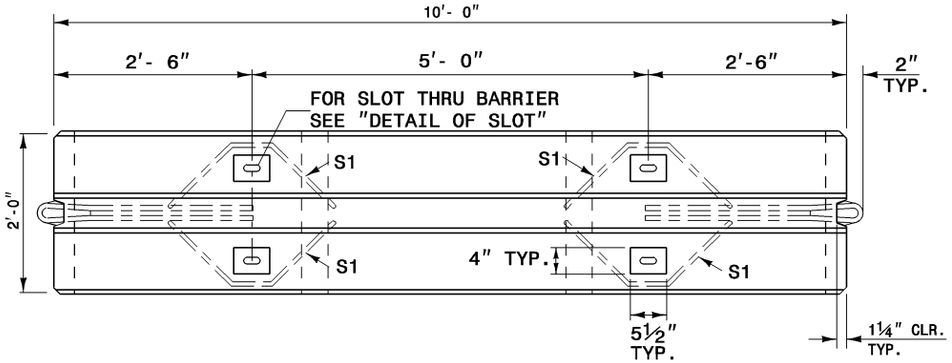

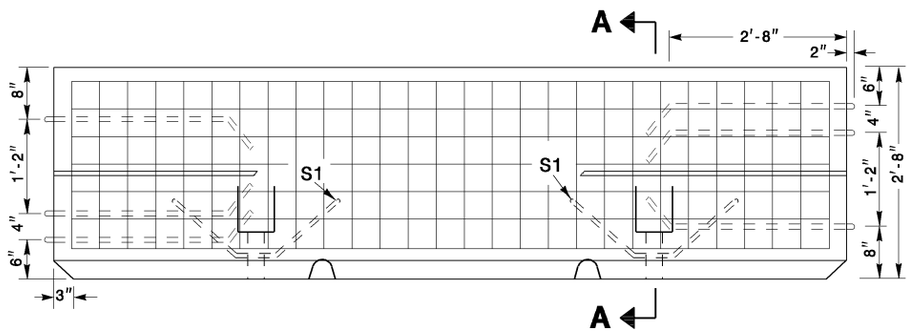

ELEVATION

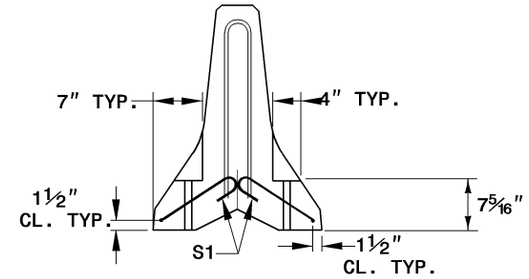

SECTION A-A

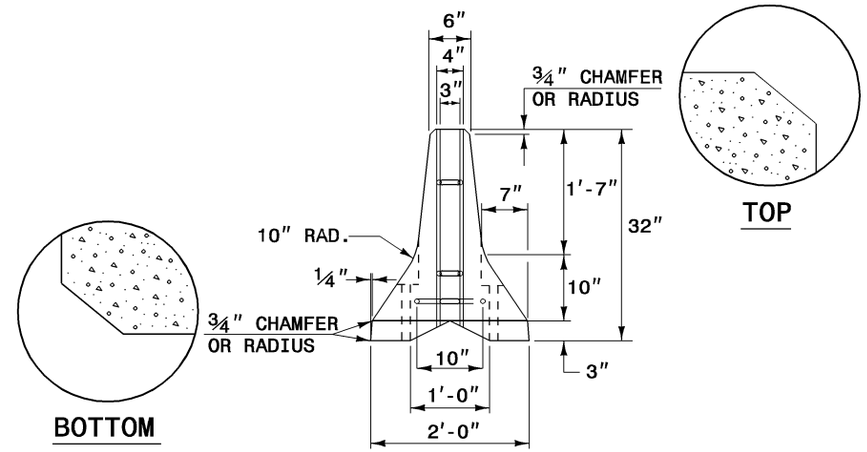

END ELEVATION

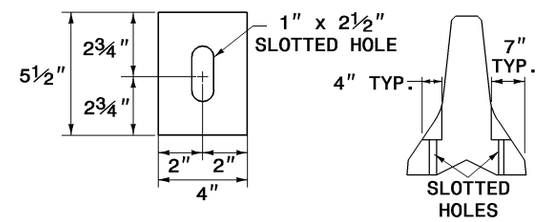

AFTER CASTING, THE DIAMETER OF THE SLOT CAN VARY BETWEEN 1" AND 1⅛".

DETAIL OF SLOT

NOTE: REFER TO STD. DWG. 1170.01-SHEET 4 FOR METHODS OF ANCHORING TEMPORARY BARRIER.

STATE OF
NORTH CAROLINA
DEPT. OF TRANSPORTATION
DIVISION OF HIGHWAYS
RALEIGH, N.C.

7-06

ENGLISH STANDARD DRAWING FOR

PORTABLE CONCRETE BARRIER

ANCHORED

SHEET 2 OF 4
1170.01