STATE OF
NORTH CAROLINA
DEPT. OF TRANSPORTATION
DIVISION OF HIGHWAYS
RALEIGH, N.C.

7-06

ENGLISH STANDARD DRAWING FOR
PORTABLE CONCRETE BARRIER

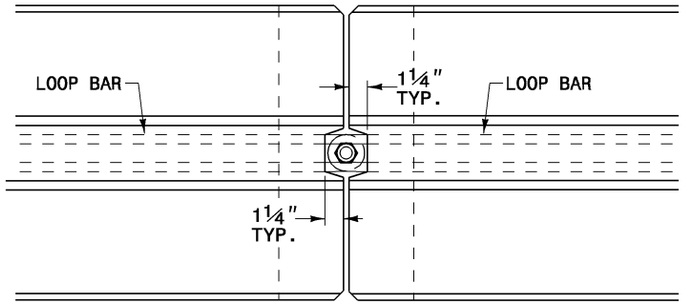

PLAN OF CONNECTION

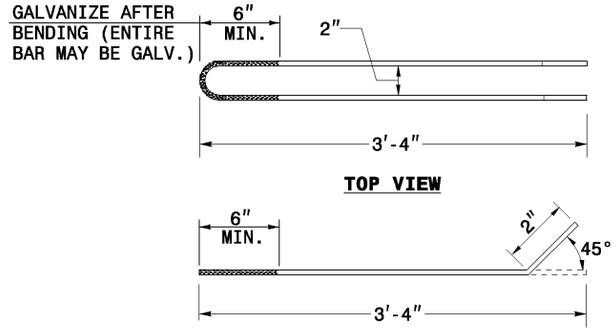

SIDE VIEW
LOOP BAR
¾" DIA. (A36M)

REINFORCEMENT DETAIL

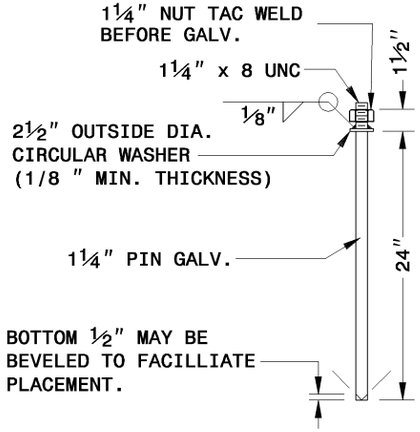

CONNECTOR PIN ASSEMBLY

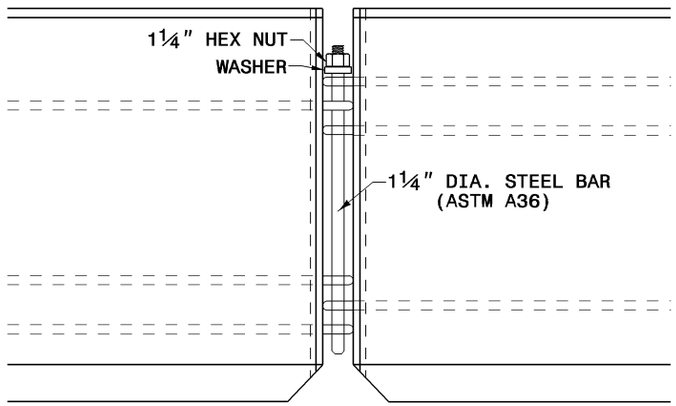

ELEVATION OF CONNECTION

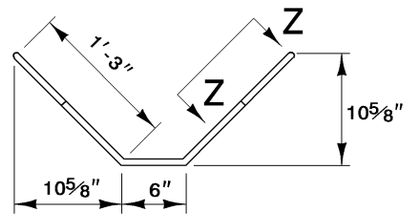

S1 BARS
#5 BARS

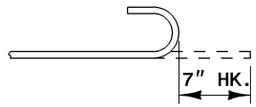

VIEW Z-Z

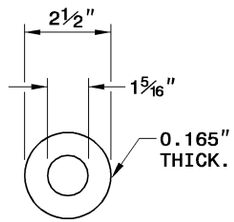

PLAIN GALVANIZED STEEL WASHER FOR 1¼" PIN

STATE OF
NORTH CAROLINA
DEPT. OF TRANSPORTATION
DIVISION OF HIGHWAYS
RALEIGH, N.C.

7-06

ENGLISH STANDARD DRAWING FOR
PORTABLE CONCRETE BARRIER

SHEET 3 OF 4
1170.01