STATE OF
NORTH CAROLINA
DEPT. OF TRANSPORTATION
DIVISION OF HIGHWAYS
RALEIGH, N.C.

7-06

ENGLISH STANDARD DRAWING FOR
PAVEMENT MARKINGS
WORD MESSAGES

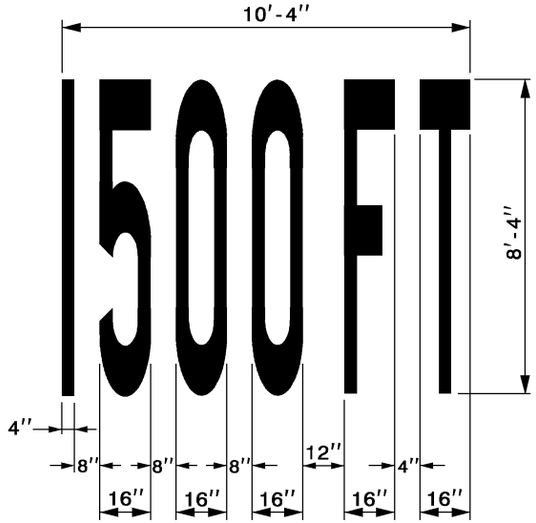

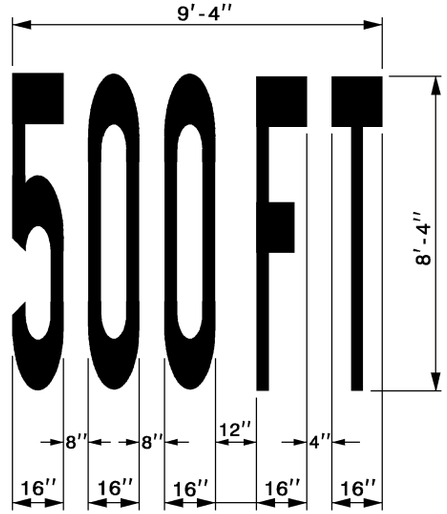

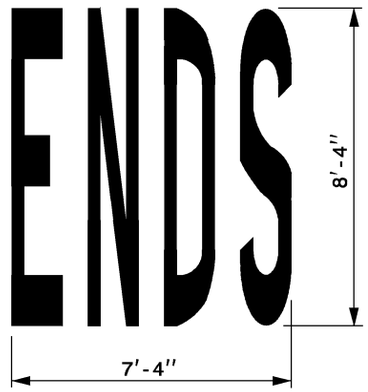

LETTER HEIGHT=8'-4"
LETTER WIDTH=16"
LETTER SPACING=8"

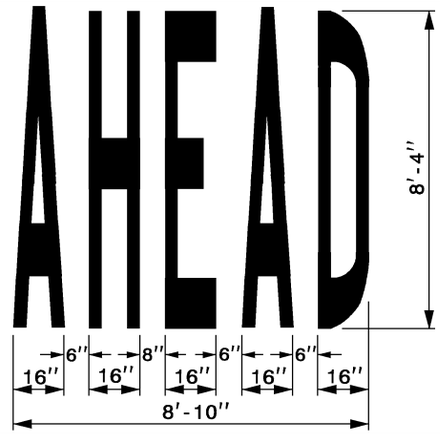

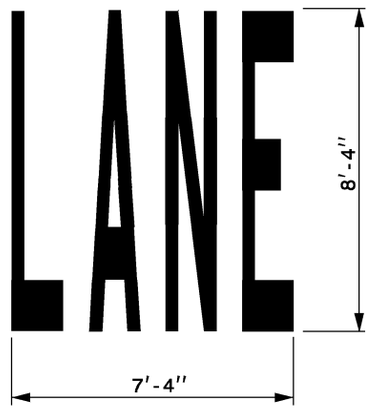

LETTER HEIGHT=8'-4"
LETTER WIDTH=16"
LETTER SPACING=8"

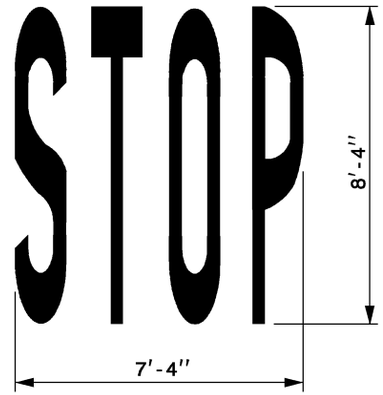

LETTER HEIGHT=8'-4"
LETTER WIDTH=16"
LETTER SPACING=8"

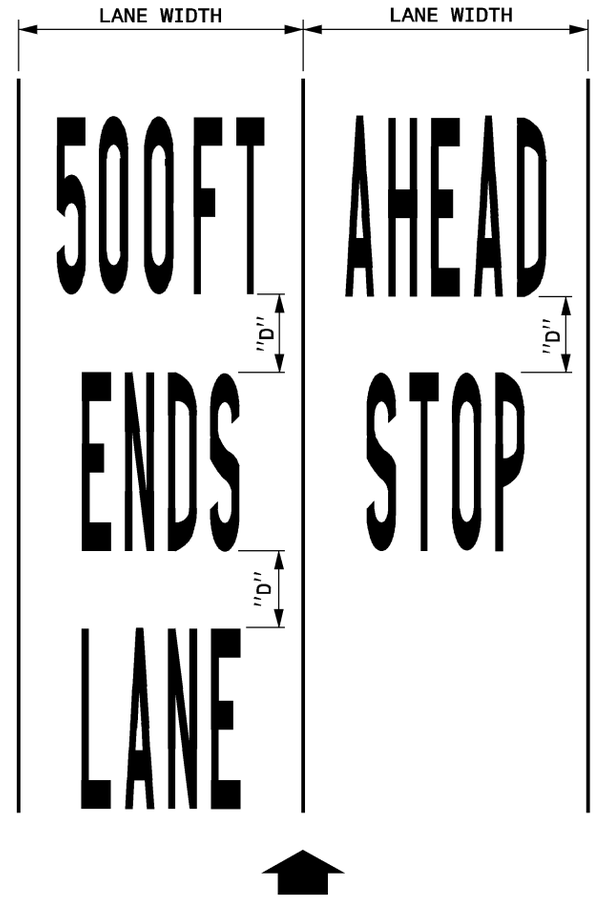

DIRECTION OF TRAVEL

WORDS ARE CENTERED IN TRAVEL LANE

SPEED LIMIT (MPH)	DISTANCE "D" BETWEEN WORD SYMBOLS
35 OR LESS	40'
40 - 50	60'
55 - 60	80'
65 OR GREATER	100'

DISTANCE "D" MAY BE ADJUSTED AS NECESSARY FOR OPTICAL SPACING

STATE OF
NORTH CAROLINA
DEPT. OF TRANSPORTATION
DIVISION OF HIGHWAYS
RALEIGH, N.C.

7-06

ENGLISH STANDARD DRAWING FOR
PAVEMENT MARKINGS
WORD MESSAGES

SHEET 3 OF 7
1205.08