STATE OF
NORTH CAROLINA
DEPT. OF TRANSPORTATION
DIVISION OF HIGHWAYS
RALEIGH, N.C.

7-06

ENGLISH STANDARD DRAWING FOR
PAVEMENT MARKINGS
RAILROAD CROSSINGS

RAILROAD 40 TO 75 FT. FROM INTERSECTION

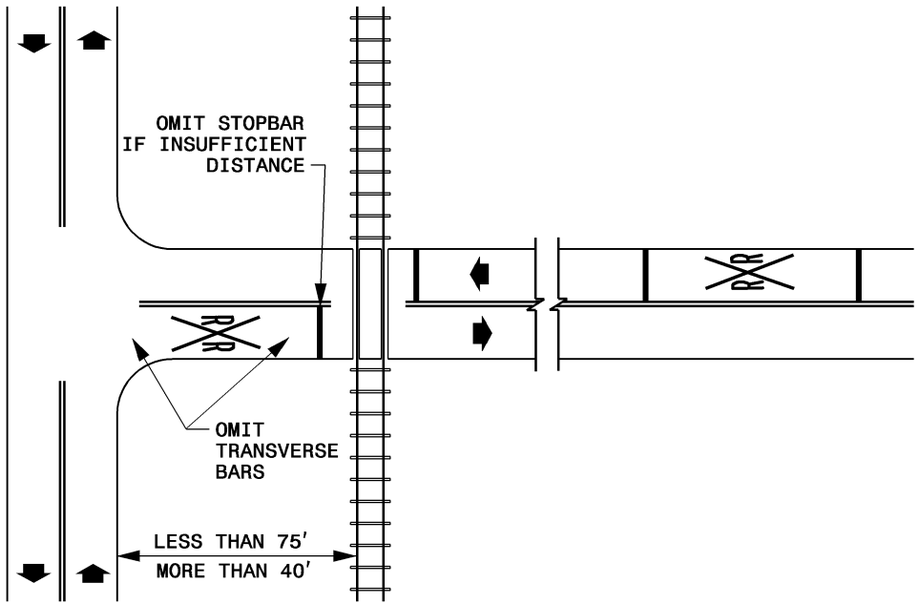

RAILROAD 40 TO 75 FT. FROM INTERSECTION

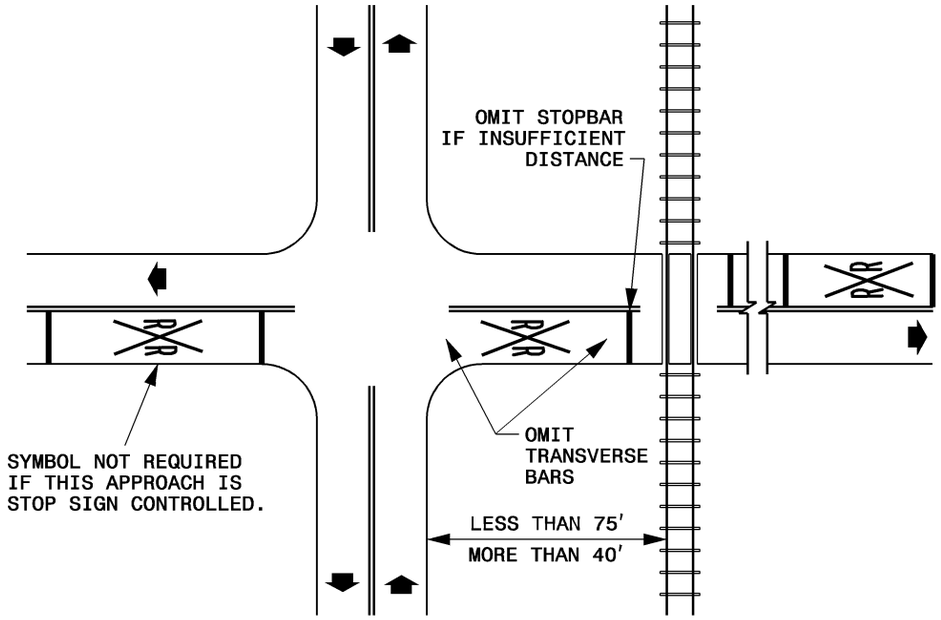

3-LANE SECTION
CENTER TURN-LANE DISCONTINUED ACROSS TRACKS

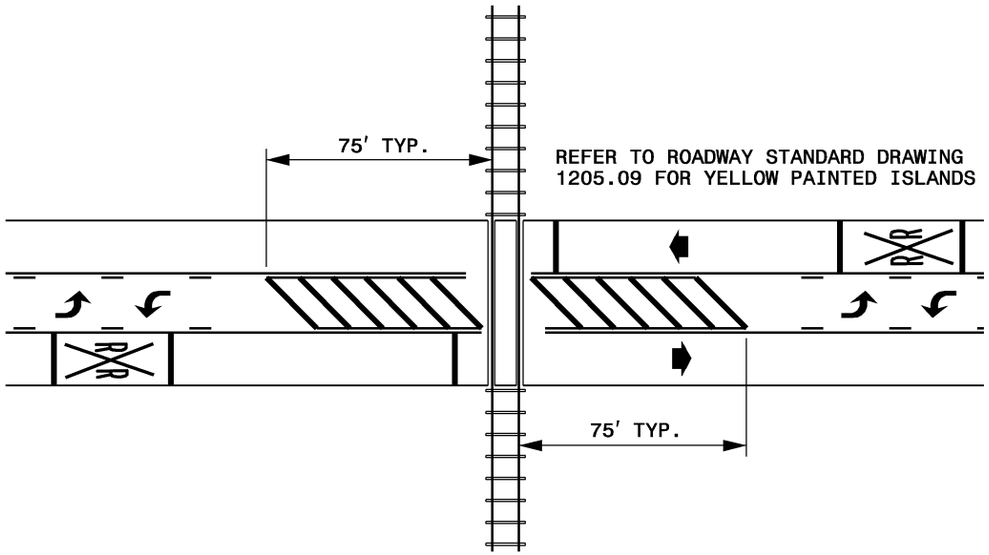

3-LANE SECTION
CENTER TURN-LANE CONTINUED ACROSS TRACKS

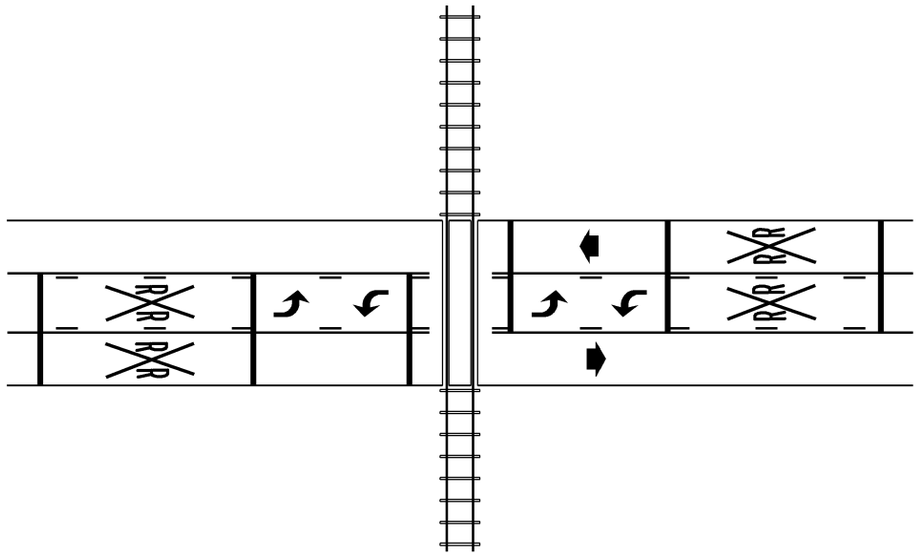

SHEET 3 OF 4

1205.11

STATE OF
NORTH CAROLINA
DEPT. OF TRANSPORTATION
DIVISION OF HIGHWAYS
RALEIGH, N.C.

7-06

ENGLISH STANDARD DRAWING FOR
PAVEMENT MARKINGS
RAILROAD CROSSINGS

SHEET 3 OF 4

1205.11