STATE OF
NORTH CAROLINA
DEPT. OF TRANSPORTATION
DIVISION OF HIGHWAYS
RALEIGH, N.C.

7-06

ENGLISH STANDARD DRAWING FOR

LIGHT STANDARDS

TWIN-ARM

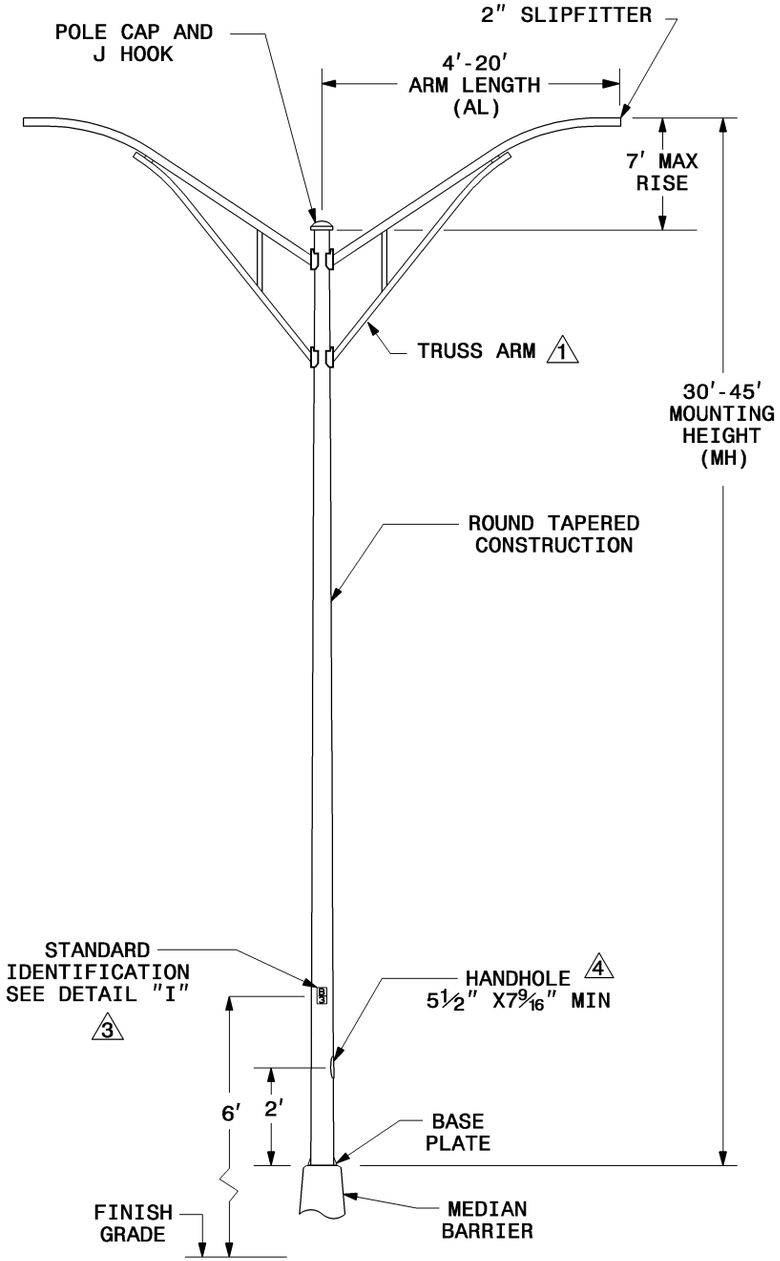

TWIN-ARM LIGHT STANDARD

TYPE MTLT (MH) TA (AL) 2

NOTES

1. SINGLE-MEMBER ARMS MAY BE PROVIDED IN LIEU OF TRUSS ARMS, WHEN SPECIFIED ARM LENGTH IS 8' OR LESS AND MOUNTING HEIGHT IS 35' OR LESS.
2. INSERT MOUNTING HEIGHT (MH) AND ARM LENGTH (AL) FROM PAY ITEM DESCRIPTION TO DETERMINE PROPOSED TWIN-ARM LIGHT STANDARDS.
3. SEE SHEET 1 OF 3 FOR DETAIL "I".
4. PROVIDE ACCESSIBLE GROUNDING LUG INSIDE.
5. SQUARE BASE PLATE REQUIRED FOR TWIN-ARM STANDARDS INSTALLED ON TYPE R1 OR R2 FOUNDATION WITH BREAKAWAY BASE. SEE PLANS FOR LOCATIONS.

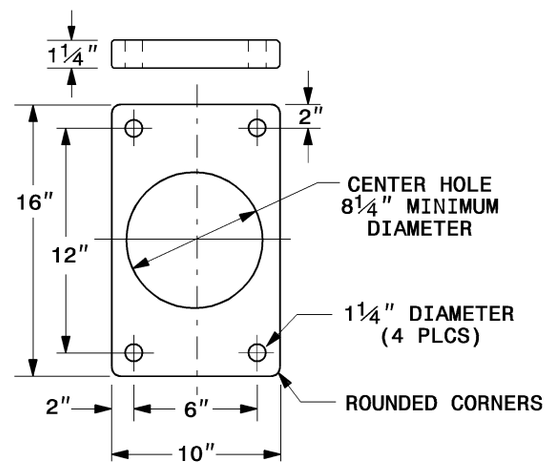

BASE PLATE DETAIL 5

ALL DIMENSIONS ARE EXACT

STATE OF
NORTH CAROLINA
DEPT. OF TRANSPORTATION
DIVISION OF HIGHWAYS
RALEIGH, N.C.

7-06

ENGLISH STANDARD DRAWING FOR

LIGHT STANDARDS

TWIN-ARM

SHEET 3 OF 3

1404.01