STATE OF NORTH CAROLINA
DEPT. OF TRANSPORTATION
DIVISION OF HIGHWAYS
RALEIGH, N.C.

7-06

ENGLISH STANDARD DRAWING FOR

STANDARD FOUNDATION

TYPE M2

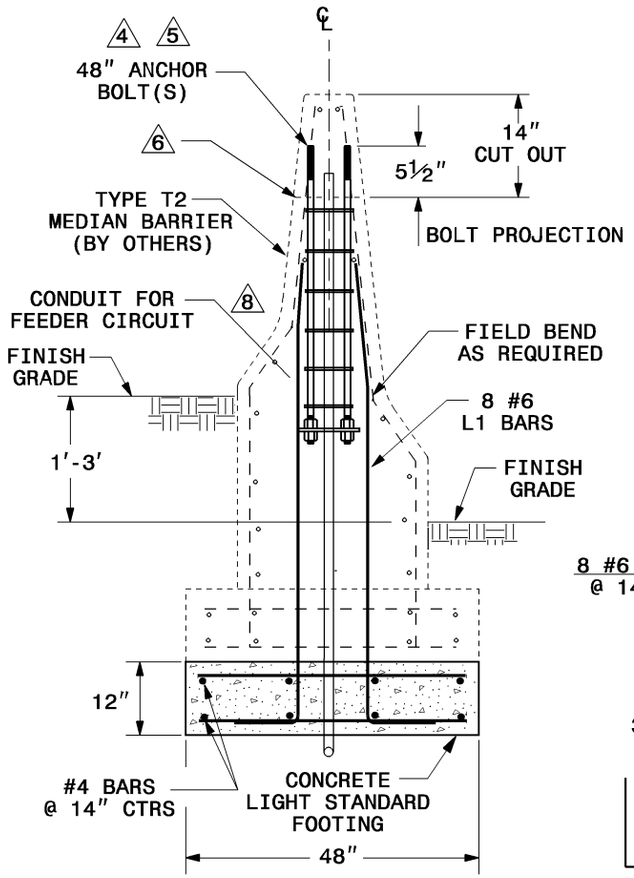

SECTION A-A

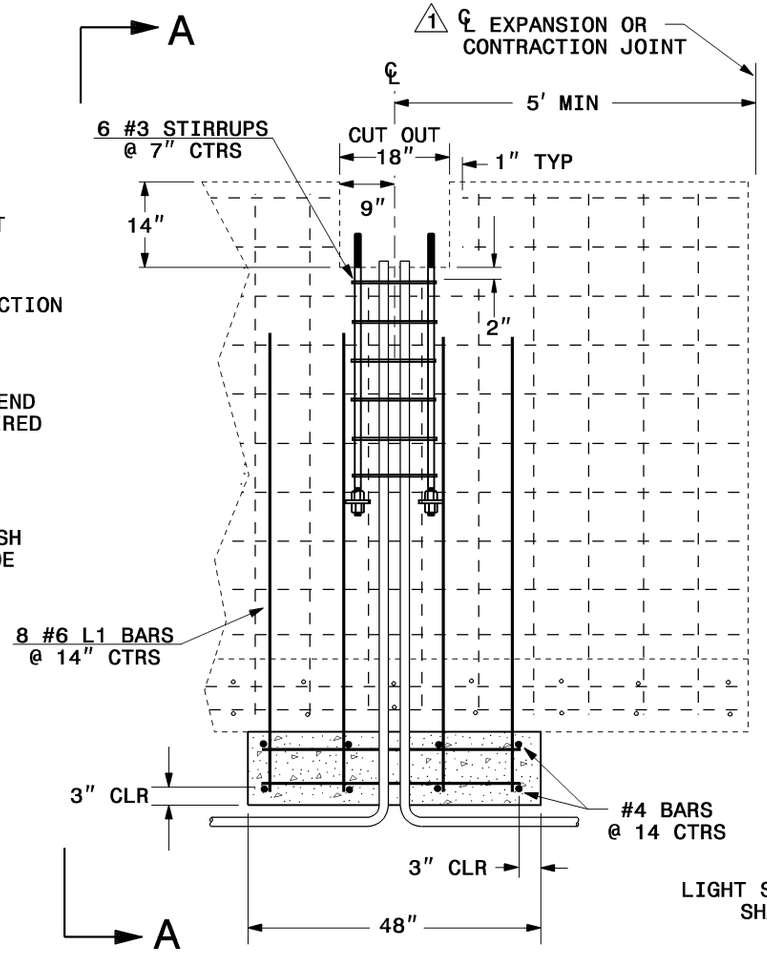

ELEVATION VIEW

TYPE M2 FOUNDATION 7

NOTES

1. LOCATE EXPANSION OR CONTRACTION JOINT 5' MINIMUM FROM CENTER LINE OF LIGHT STANDARD FOUNDATION.
2. ALL SPECIFIED STEEL AND CONCRETE ON THIS SHEET IS IN ADDITION TO THAT REQUIRED FOR THE MEDIAN BARRIER.
3. DIMENSIONS FOR #3 STIRRUPS ARE APPROXIMATE. FIT STIRRUPS TIGHTLY AROUND ANCHOR BOLTS.
4. PROTECT ANCHOR BOLTS AND CONDUIT DURING PLACEMENT OF CONCRETE.
5. FURNISH ALL ANCHOR BOLTS WITH HEX NUTS, LEVELING NUTS, FLAT WASHERS, LOCK WASHERS AND FLAT CONNECTING BAR.
6. PROVIDE ½" RADIUS ON ALL EXPOSED EDGES SIMILAR TO TOP OF BARRIER.
7. USE TYPE M2 STANDARD FOUNDATION WITH TYPE T2 MEDIAN BARRIER.
8. SEE LIGHTING LAYOUT PLANS FOR SIZE AND ORIENTATION OF CONDUIT FOR FEEDER CIRCUITS.

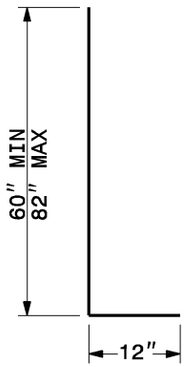

#6 L-1 BAR

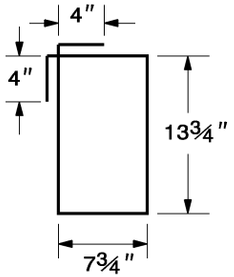

#3 STIRRUP 3

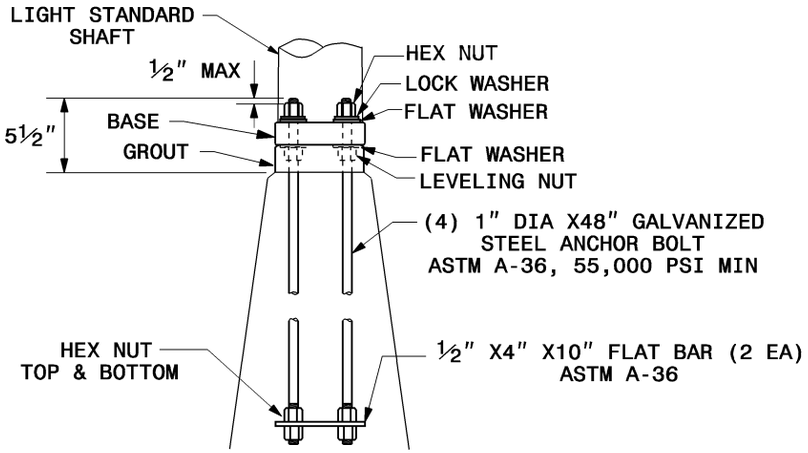

ANCHOR BOLT DETAIL 5

BARRIER CUT OUT NOT SHOWN

STATE OF NORTH CAROLINA
DEPT. OF TRANSPORTATION
DIVISION OF HIGHWAYS
RALEIGH, N.C.

7-06

ENGLISH STANDARD DRAWING FOR

STANDARD FOUNDATION

TYPE M2

SHEET 3 OF 3

1405.01

SHEET 3 OF 3

1405.01