STATE OF
NORTH CAROLINA
DEPT. OF TRANSPORTATION
DIVISION OF HIGHWAYS
RALEIGH, N.C.

7-06

ENGLISH STANDARD DRAWING FOR

PRECAST SANITARY SEWER DROP MANHOLE

4′ DIAMETER OUTSIDE DROP

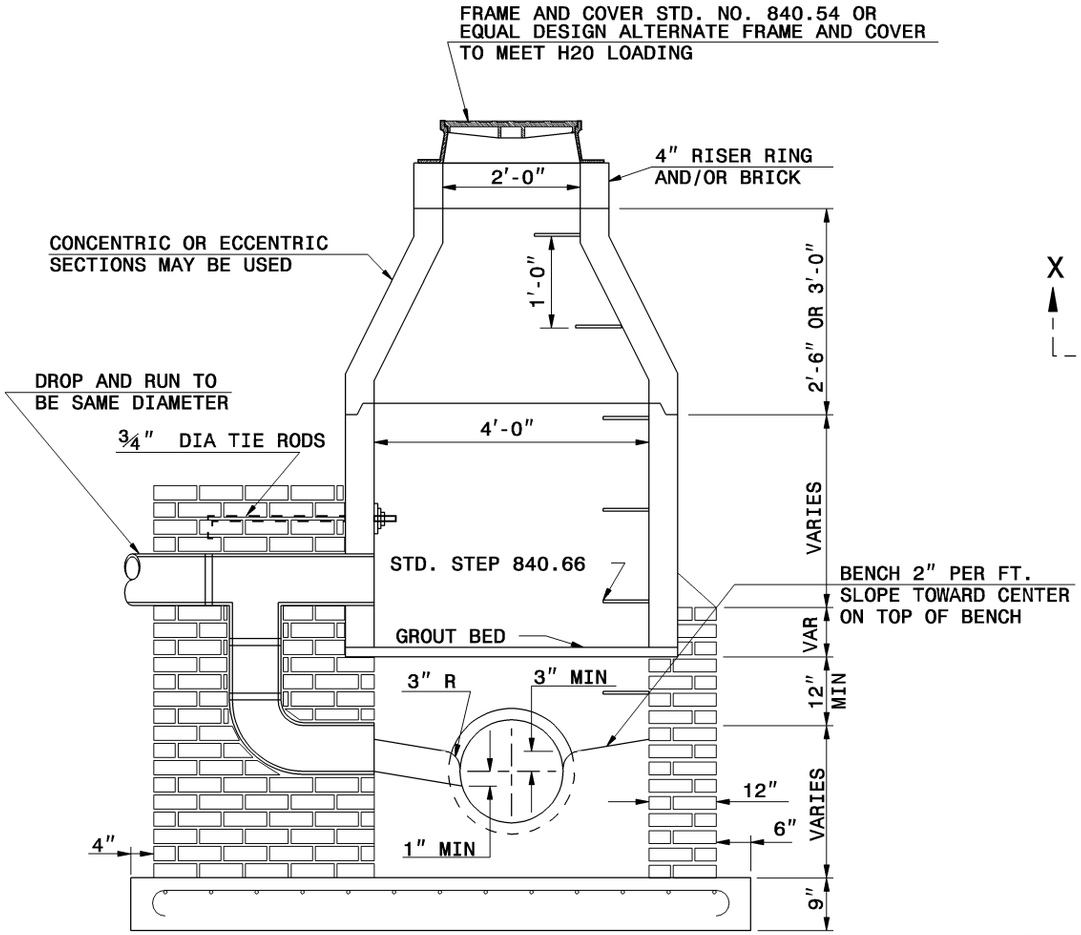

SECTION X-X

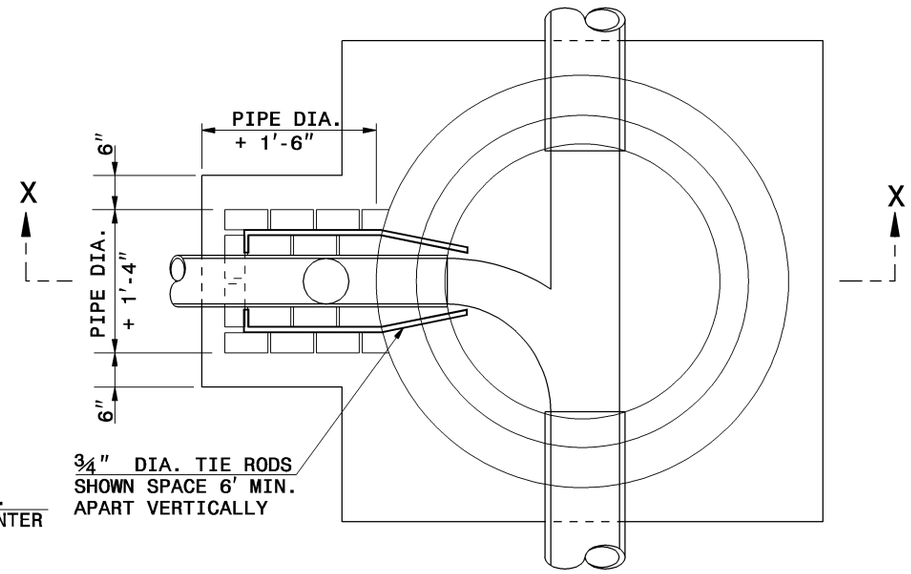

PLAN

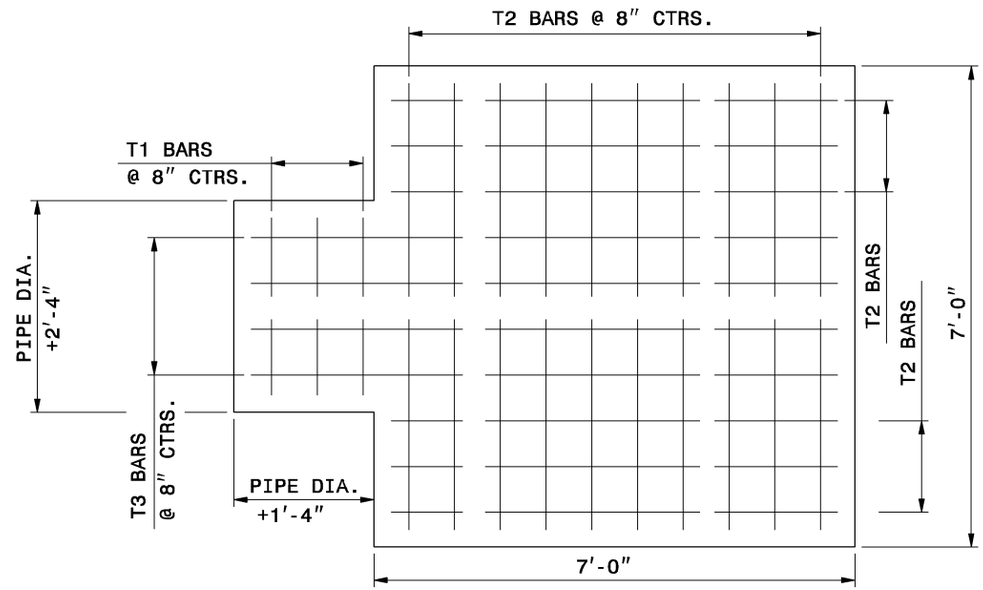

FLOOR SLAB

SHEET 1 OF 2

1525.02

STATE OF
NORTH CAROLINA
DEPT. OF TRANSPORTATION
DIVISION OF HIGHWAYS
RALEIGH, N.C.

7-06

ENGLISH STANDARD DRAWING FOR

PRECAST SANITARY SEWER DROP MANHOLE

4′ DIAMETER OUTSIDE DROP

SHEET 1 OF 2

1525.02