STATE OF
NORTH CAROLINA
DEPT. OF TRANSPORTATION
DIVISION OF HIGHWAYS
RALEIGH, N.C.

7-06

ENGLISH STANDARD DRAWING FOR

SPECIAL SEDIMENT CONTROL FENCE

GENERAL NOTES:

USE NO. 5 OR NO. 57 STONE FOR SEDIMENT CONTROL.

USE HARDWARE CLOTH 24 GAUGE WIRE MESH WITH ¼ INCH MESH OPENINGS.

INSTALL 5 FT. SELF FASTENER ANGLE STEEL POST 2 FT. DEEP MINIMUM.

SPACE POST A MAXIMUM OF 3 FT.

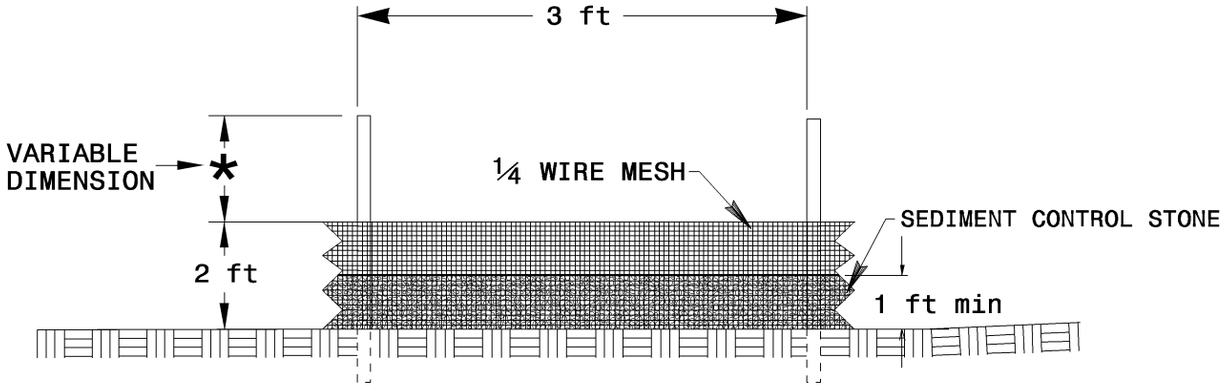

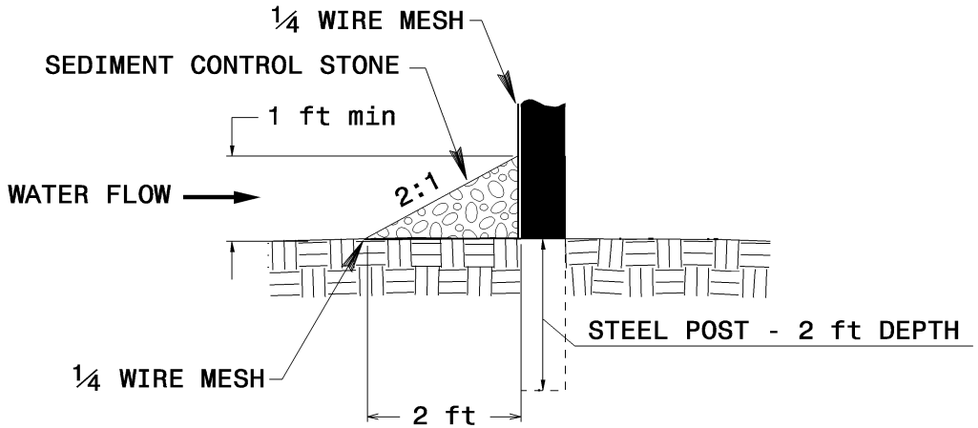

SHEET 1 OF 1

1606.01

STATE OF
NORTH CAROLINA
DEPT. OF TRANSPORTATION
DIVISION OF HIGHWAYS
RALEIGH, N.C.

7-06

ENGLISH STANDARD DRAWING FOR

SPECIAL SEDIMENT CONTROL FENCE

SHEET 1 OF 1

1606.01