STATE OF
NORTH CAROLINA
DEPT. OF TRANSPORTATION
DIVISION OF HIGHWAYS
RALEIGH, N.C.

7-06

ENGLISH STANDARD DRAWING FOR

**RISER BASIN**

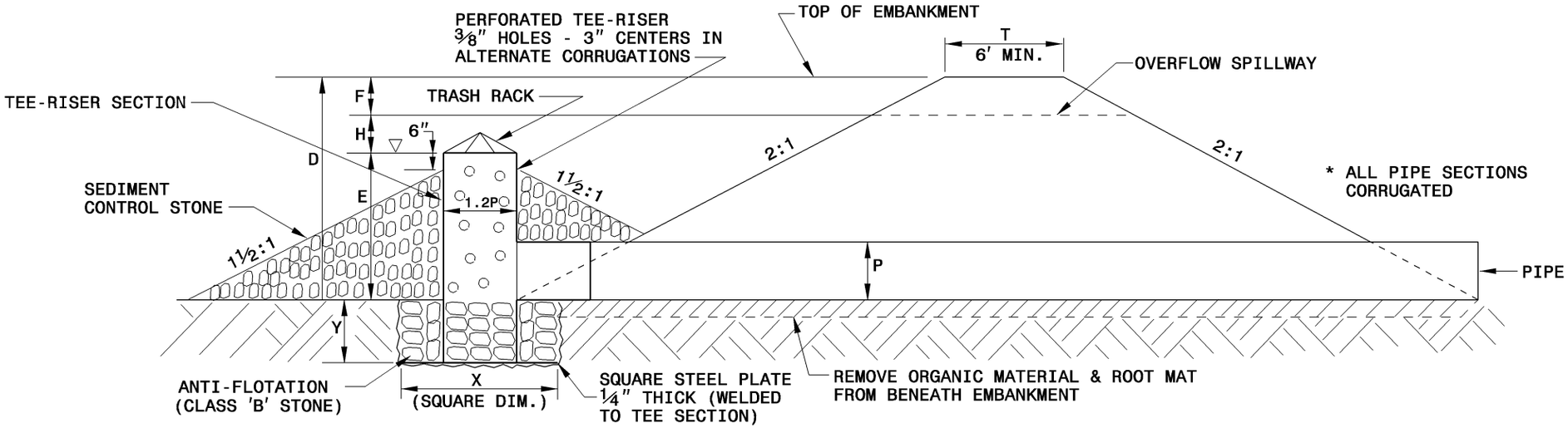


**SECTIONAL VIEW**

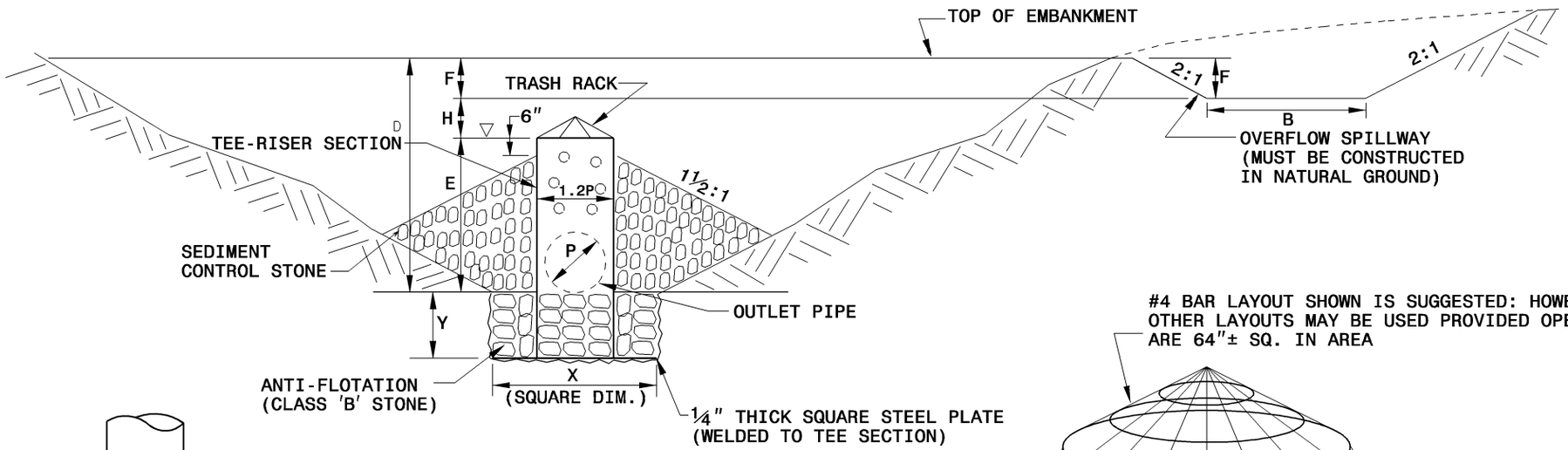


**PROFILE VIEW**

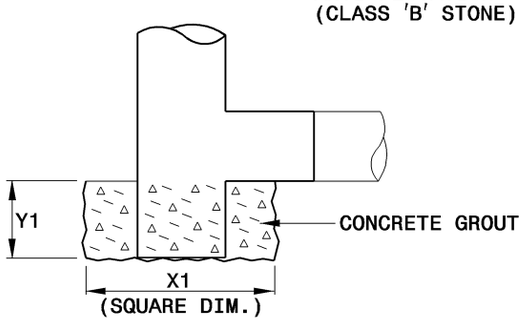


**ALTERNATE ANTI-FLOTATION METHOD**

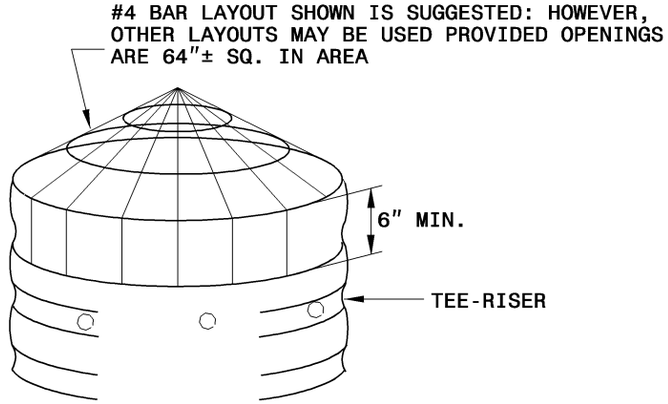


**TRASH RACK DETAIL**

SHEET 2 OF 2

**1630.01**

STATE OF
NORTH CAROLINA
DEPT. OF TRANSPORTATION
DIVISION OF HIGHWAYS
RALEIGH, N.C.

7-06

ENGLISH STANDARD DRAWING FOR

**RISER BASIN**

SHEET 2 OF 2

**1630.01**