STATE OF
NORTH CAROLINA
DEPT. OF TRANSPORTATION
DIVISION OF HIGHWAYS
RALEIGH, N.C.

7-06

ENGLISH STANDARD DRAWING FOR

# ROCK INLET SEDIMENT TRAP TYPE 'A'

SHEET 1 OF 1

1632.01

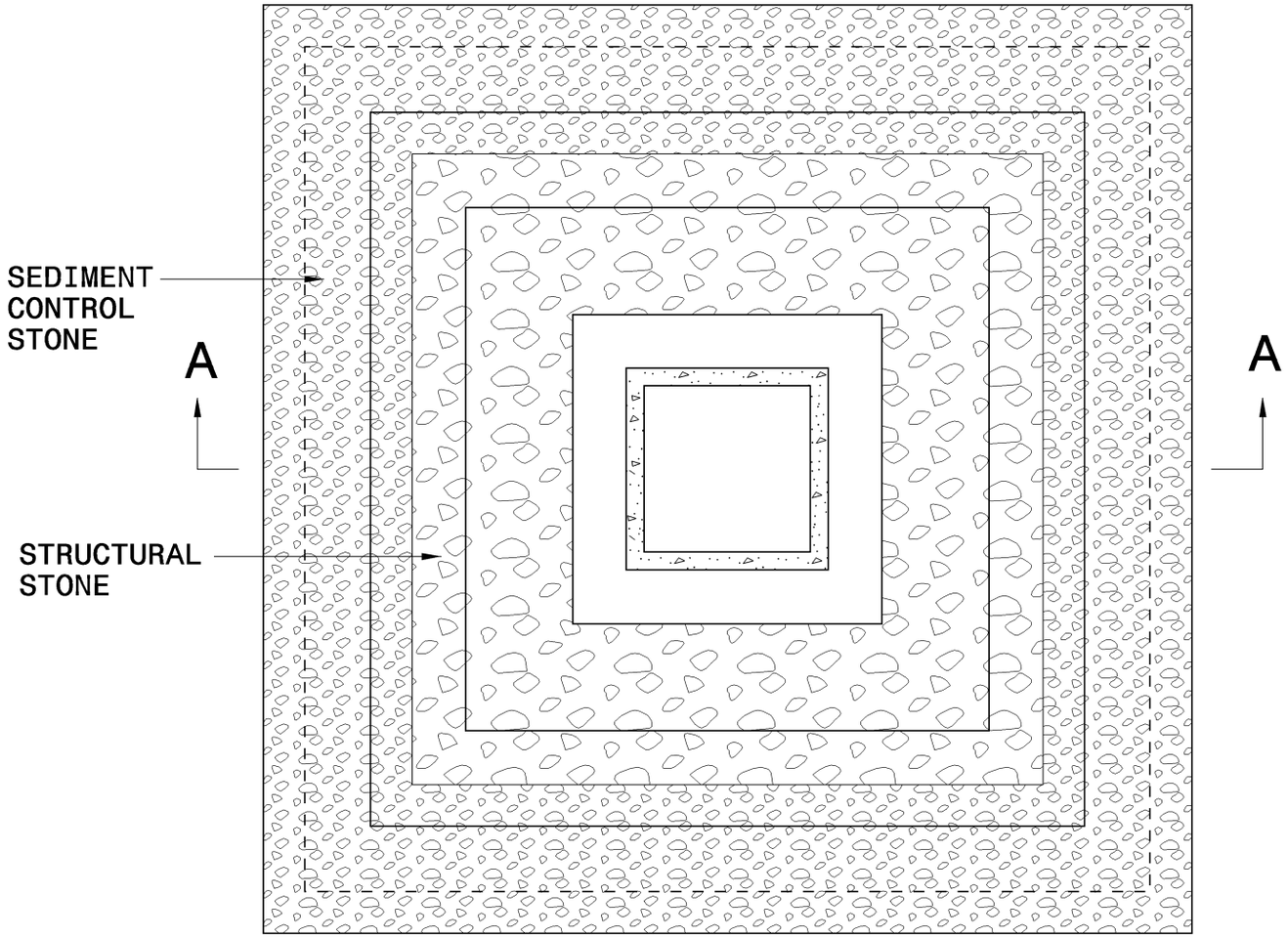


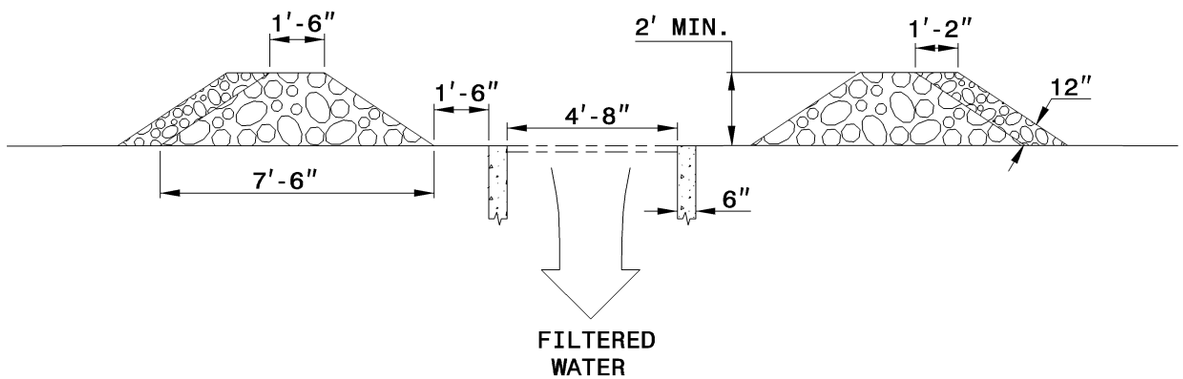


**SECTION A-A**

NOTE:

CLEAN SEDIMENT WHEN FULL OR AS DIRECTED BY ENGINEER.

USE NO. 5 OR NO. 57 STONE FOR SEDIMENT CONTROL.

USE CLASS 'B' STONE FOR STRUCTURAL STONE.

CONSTRUCT TOP OF BERM A MINIMUM OF ONE FOOT BELOW THE SHOULDER OR ANY DIVERSION POINT.

STATE OF
NORTH CAROLINA
DEPT. OF TRANSPORTATION
DIVISION OF HIGHWAYS
RALEIGH, N.C.

7-06

ENGLISH STANDARD DRAWING FOR

ROCK INLET SEDIMENT TRAP TYPE 'A'

SHEET 1 OF 1

1632.01