STATE OF
NORTH CAROLINA
DEPT. OF TRANSPORTATION
DIVISION OF HIGHWAYS
RALEIGH, N.C.

7-06

ENGLISH STANDARD DRAWING FOR

# ROCK INLET SEDIMENT TRAP TYPE 'C'

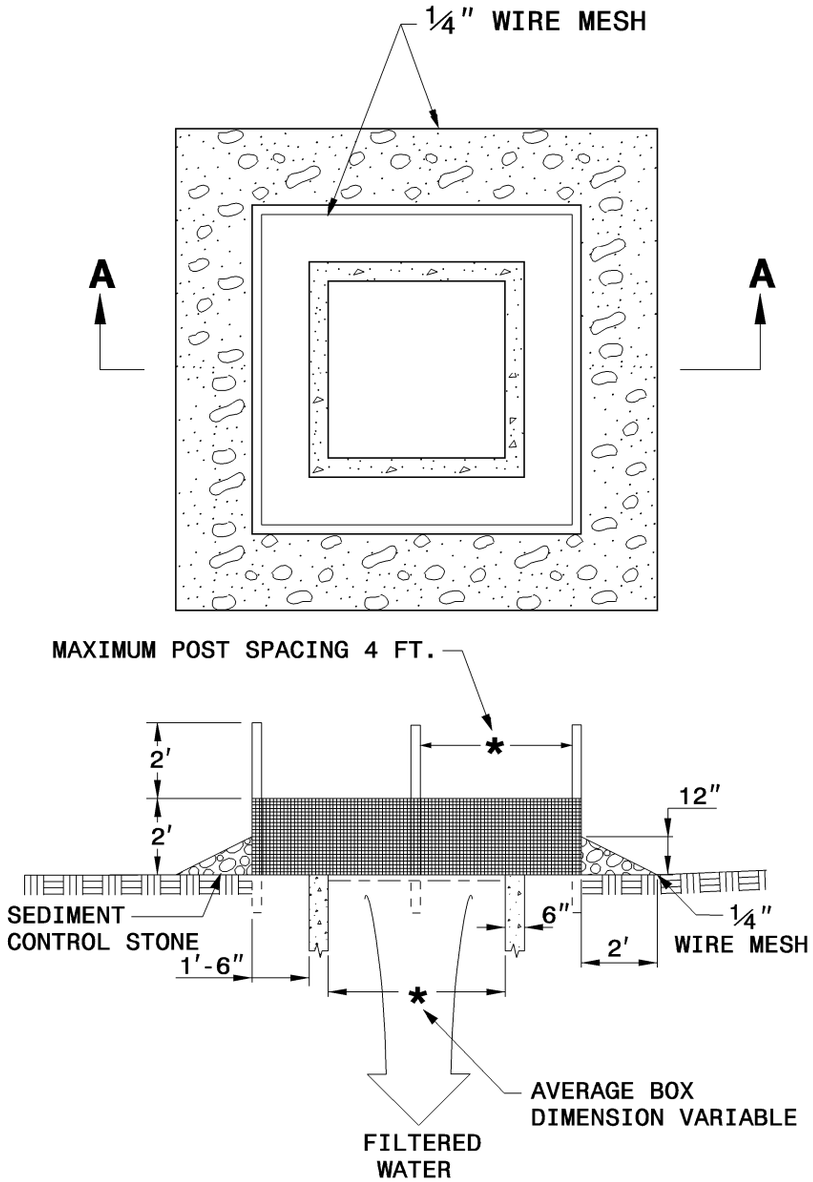


**SECTION A-A**

## MULTI-DIRECTIONAL FLOW

NOTE

USE NO. 5 OR NO. 57 STONE FOR SEDIMENT CONTROL.

USE 24 GAUGE MINIMUM WIRE MESH HARDWARE CLOTH WITH ¼ INCH MESH OPENINGS.

PLACE TOP OF WIRE MESH A MINIMUM OF ONE FOOT BELOW THE SHOULDER OR ANY DIVERSION POINT.

INSTALL WIRE MESH UNDER SEDIMENT CONTROL STONE.

USE 5' STEEL POST, INSTALLED 1.5' DEEP MINIMUM, AND OF THE SELF-FASTENER ANGLE STEEL TYPE.

SPACE POST A MAXIMUM OF 4'.

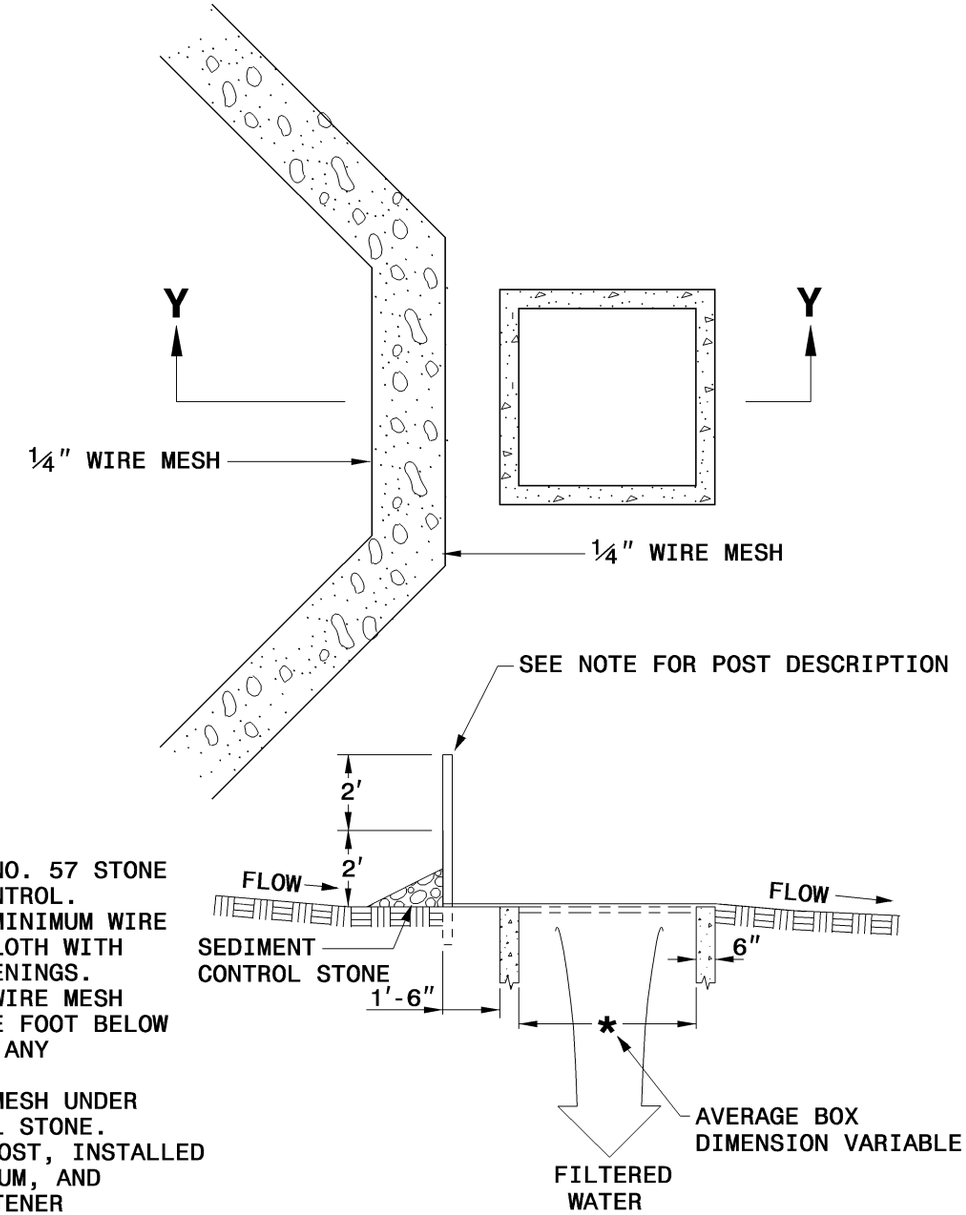


**SECTION Y-Y**

## SINGLE-DIRECTIONAL FLOW

SHEET 1 OF 1

1632.03

STATE OF
NORTH CAROLINA
DEPT. OF TRANSPORTATION
DIVISION OF HIGHWAYS
RALEIGH, N.C.

7-06

ENGLISH STANDARD DRAWING FOR

ROCK INLET SEDIMENT TRAP TYPE 'C'

SHEET 1 OF 1

1632.03