STATE OF
NORTH CAROLINA
DEPT. OF TRANSPORTATION
DIVISION OF HIGHWAYS
RALEIGH, N.C.

7-06

ENGLISH STANDARD DRAWING FOR

TEMPORARY ROCK SEDIMENT DAM TYPE 'B'

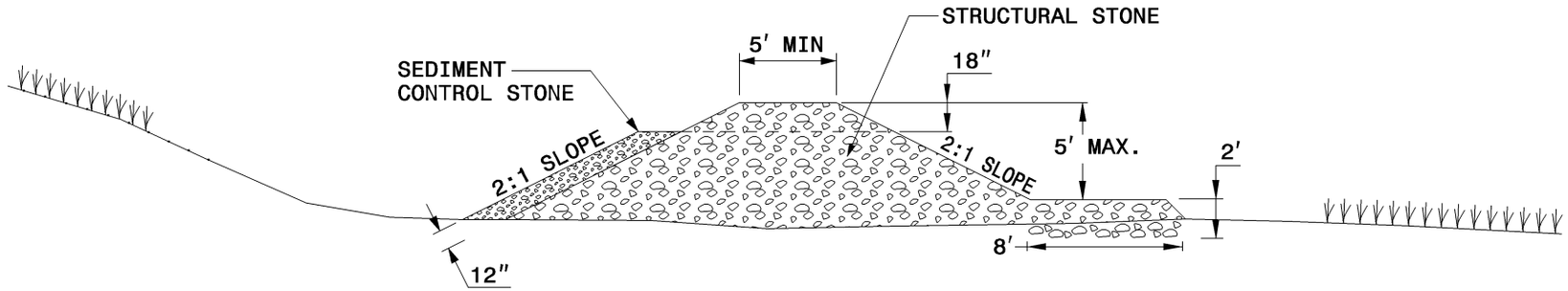

PROFILE SECTION

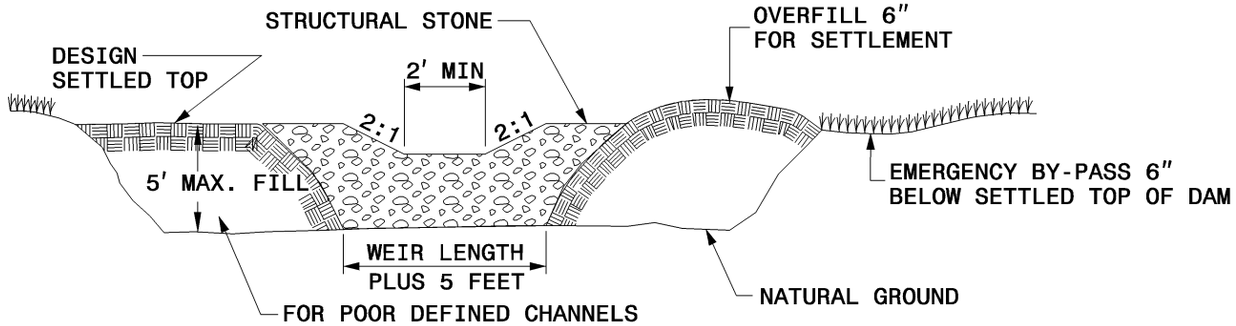

CROSS SECTION

DRAINAGE AREA (ACRES)	WEIR LENGTH (FT)
1	4.0
2	6.0
3	8.0
4	10.0
5	12.0

NOTES:

USE CLASS 'B' EROSION CONTROL STONE FOR STRUCTURAL STONE.

USE NO. 5 OR NO. 57 STONE FOR SEDIMENT CONTROL.

DIKE MAY EXTEND ALONG MORE THAN ONE SIDE OF THE TRAP AREA. PROVIDE A TOTAL SEDIMENT STORAGE VOLUME OF 1800± CUBIC FEET PER ACRE OF DISTURBED AREA. SOME OF THE REQUIRED VOLUME MAY BE PROVIDED BY OTHER UP OR DOWNSTREAM CONTROLS.

AN UNDERLAY OF STRUCTURAL STONE WITH FILTER FABRIC MAY BE REQUIRED BY THE ENGINEER.

SHEET 1 OF 1

1634.02

STATE OF
NORTH CAROLINA
DEPT. OF TRANSPORTATION
DIVISION OF HIGHWAYS
RALEIGH, N.C.

7-06

ENGLISH STANDARD DRAWING FOR

TEMPORARY ROCK SEDIMENT DAM TYPE 'B'

SHEET 1 OF 1

1634.02