STATE OF
NORTH CAROLINA
DEPT. OF TRANSPORTATION
DIVISION OF HIGHWAYS
RALEIGH, N.C.

7-06

ENGLISH STANDARD DRAWING FOR

ROCK PIPE INLET SEDIMENT TRAP TYPE 'B'

SHEET 1 OF 1

1635.02

NOTE:
USE CLASS 'A' EROSION CONTROL STON FOR STRUCTURAL STONE.
USE NO. 5 OR NO. 57 STONE FOR SEDIMENT CONTROL.
CONSTRUCT TOP OF BERM A MINIMUM OF ONE FOOT BELOW THE SHOULDER OR DIVERSION POINT.
PROVIDE A TOTAL SEDIMENT TRAP VOLUME OF 1800± CUBIC FEET PER ACRE OF DISTURBED AREA. SOME OF THE REQUIRED VOLUME MAY BE PROVIDED BY OTHER UP OR DOWNSTREAM CONTROLS.

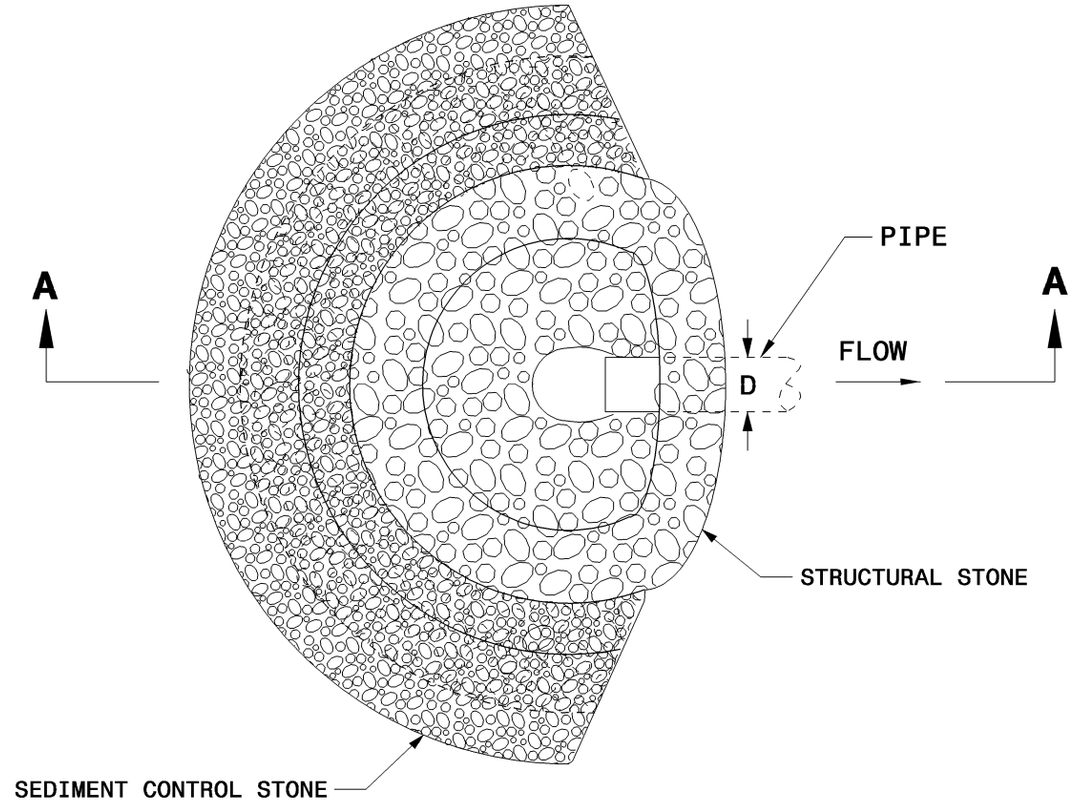

PLAN

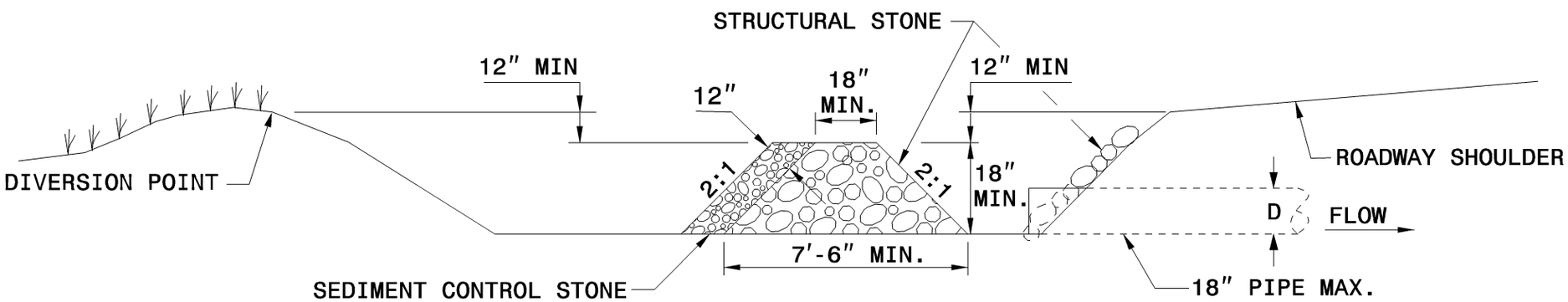

SECTION A-A

STATE OF
NORTH CAROLINA
DEPT. OF TRANSPORTATION
DIVISION OF HIGHWAYS
RALEIGH, N.C.

7-06

ENGLISH STANDARD DRAWING FOR

ROCK PIPE INLET SEDIMENT TRAP TYPE 'B'

SHEET 1 OF 1

1635.02