STATE OF
NORTH CAROLINA
DEPT. OF TRANSPORTATION
DIVISION OF HIGHWAYS
RALEIGH, N.C.

7-06

ENGLISH STANDARD DRAWING FOR

SIGNAL HEADS

VEHICULAR SIGNAL HEADS

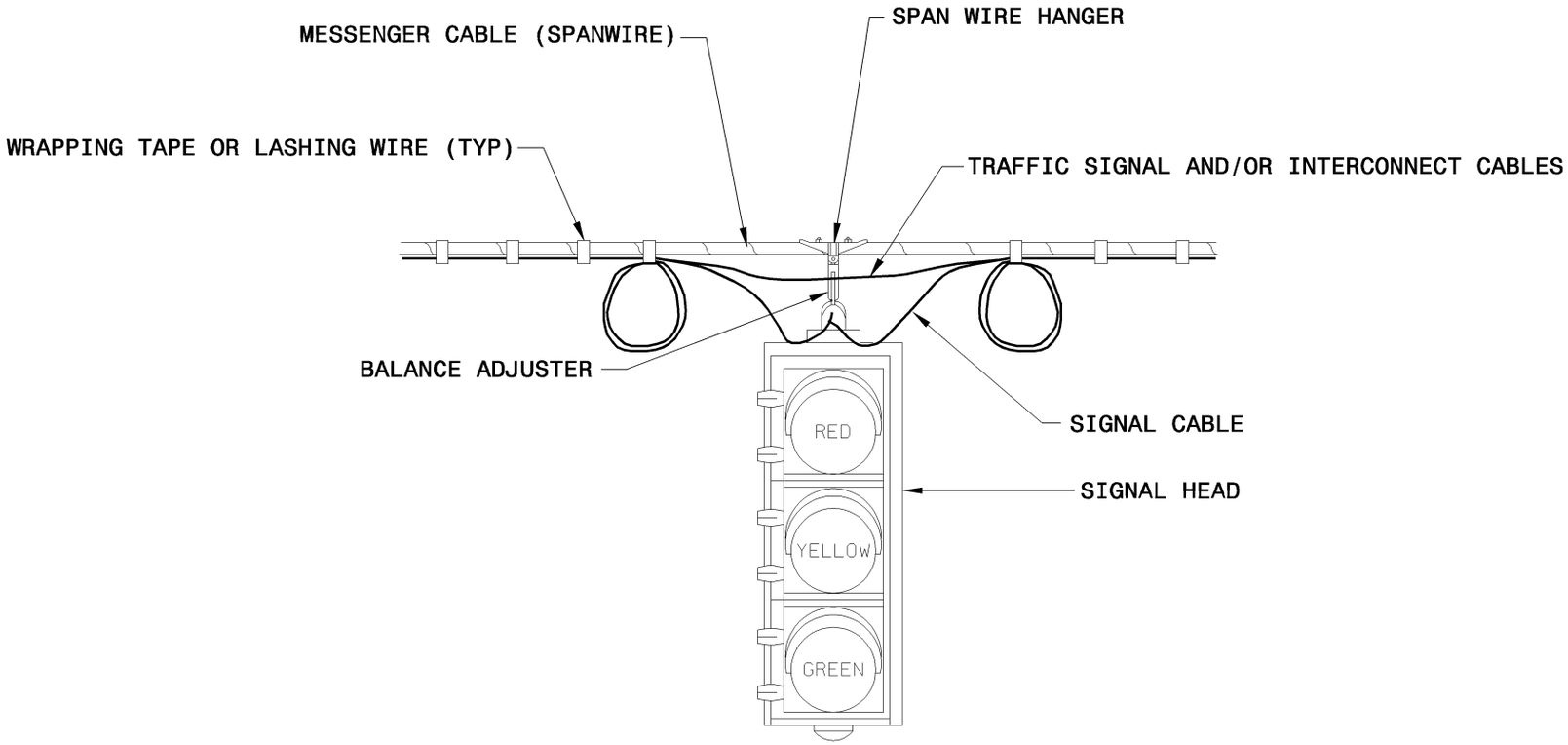

SHEET 1 OF 2

1705.01

STATE OF
NORTH CAROLINA
DEPT. OF TRANSPORTATION
DIVISION OF HIGHWAYS
RALEIGH, N.C.

7-06

ENGLISH STANDARD DRAWING FOR

SIGNAL HEADS

VEHICULAR SIGNAL HEADS

SHEET 1 OF 2

1705.01