STATE OF
NORTH CAROLINA
DEPT. OF TRANSPORTATION
DIVISION OF HIGHWAYS
RALEIGH, N.C.

7-06

ENGLISH STANDARD DRAWING FOR

UNDERGROUND CONDUIT-TRENCHING

IN EXISTING PAVEMENT (NOT AT GUTTER)

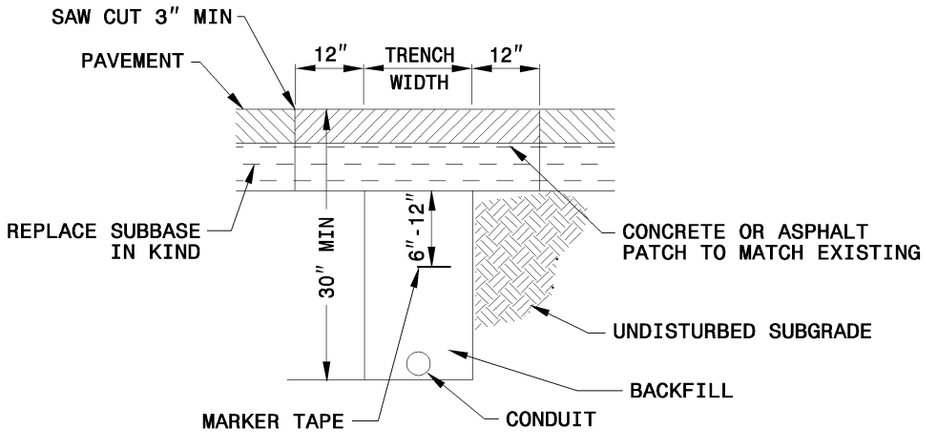

IN EXISTING PAVEMENT (AT GUTTER)

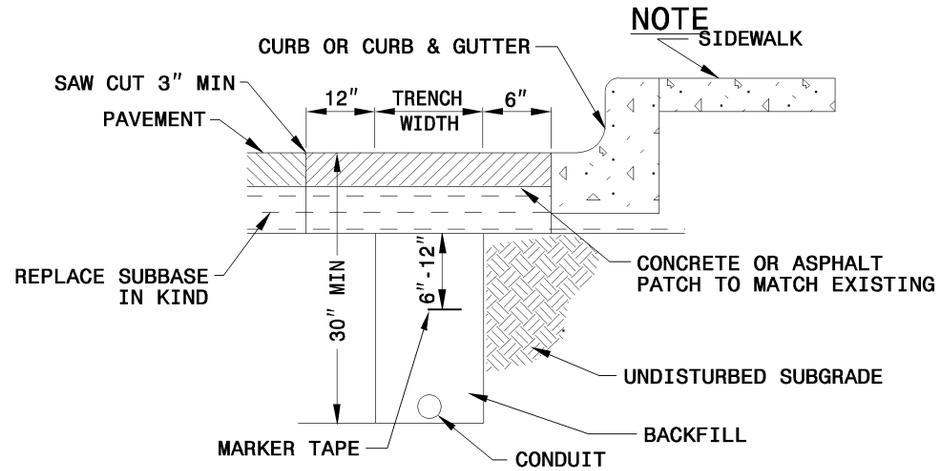

THE REMOVAL OF PAVEMENT BEYOND THE EDGES OF THE TRENCH, AS SHOWN, WILL NOT BE REQUIRED IF SAID EDGES ARE SAW CUT AND MAINTAINED NEATLY WITH NO SHATTER.

IN SIDEWALK OR DRIVEWAY

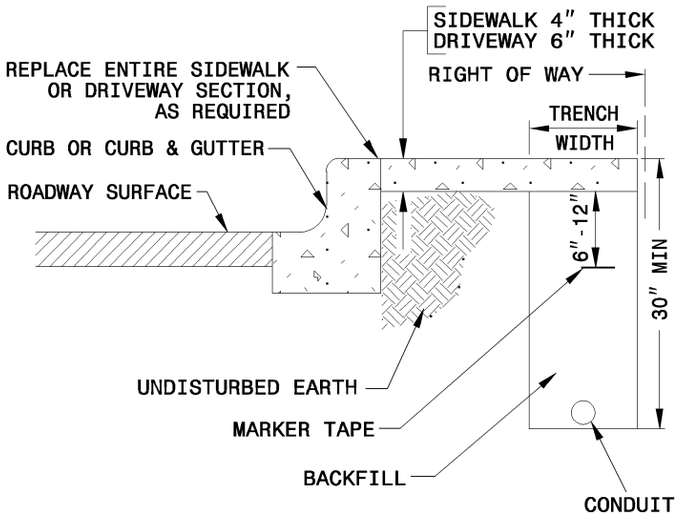

IN NEW PAVEMENT

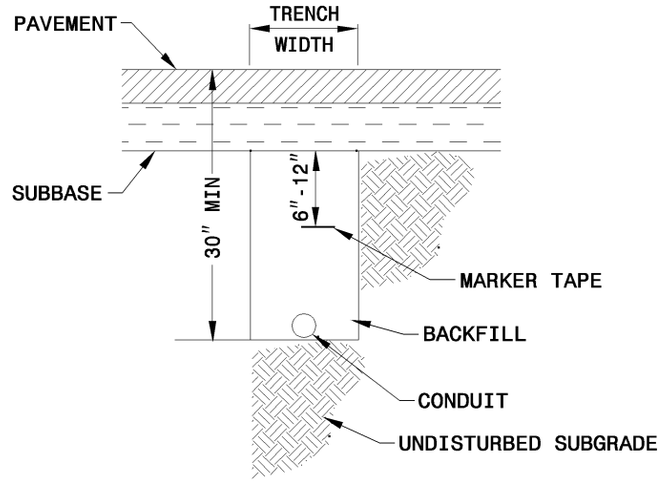

IN EARTH

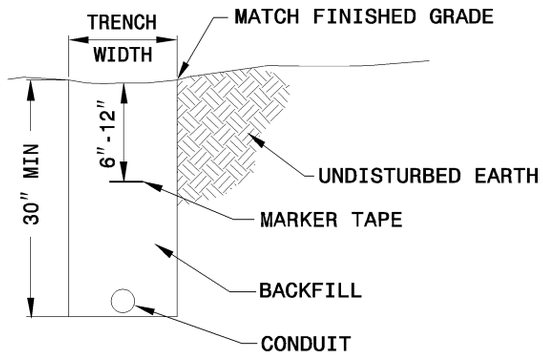

NOTE

DIG TRENCH WIDE ENOUGH TO ACCEPT THE REQUIRED CONDUITS AND TO PERMIT PROPER COMPACTION.

STATE OF
NORTH CAROLINA
DEPT. OF TRANSPORTATION
DIVISION OF HIGHWAYS
RALEIGH, N.C.

7-06

ENGLISH STANDARD DRAWING FOR

UNDERGROUND CONDUIT-TRENCHING

SHEET 1 OF 2
1715.01