STATE OF
NORTH CAROLINA
DEPT. OF TRANSPORTATION
DIVISION OF HIGHWAYS
RALEIGH, N.C.

7-06

ENGLISH STANDARD DRAWING FOR
INDUCTIVE DETECTION LOOPS
LOOP WIRE DETAILS

SHEET 2 OF 3

1725.01

LOOP WIRE SPLICE POINT DETAILS

LOOP WIRE AT JUNCTION BOX

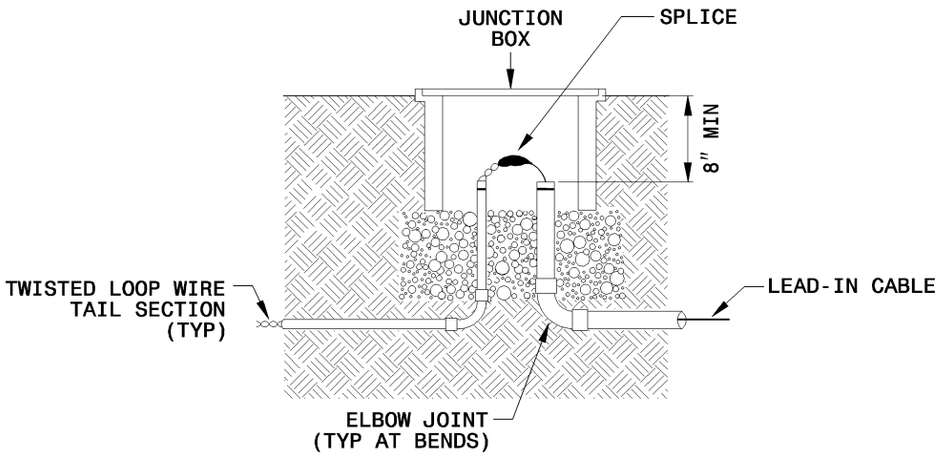

LOOP WIRE AT POLE

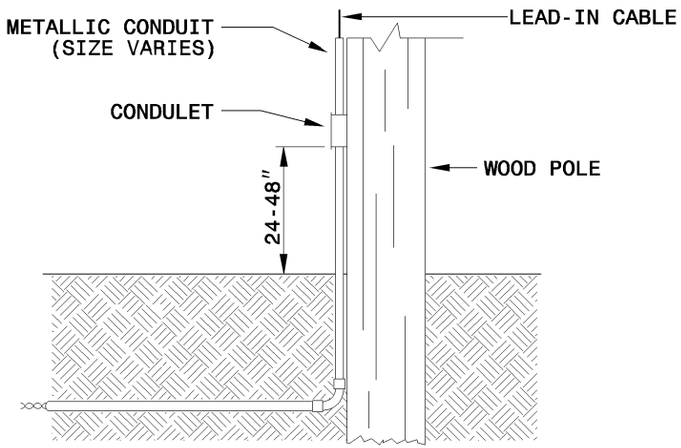

NOTE

SPLICE ALL LOOP WIRE TAIL SECTIONS/LEAD-IN CABLE IN JUNCTION BOXES OR APPROVED CONDULETS.

LOOP WIRE PAVEMENT EDGE DETAILS

LOOP WIRE AT 2' 6" CURB & GUTTER SECTION

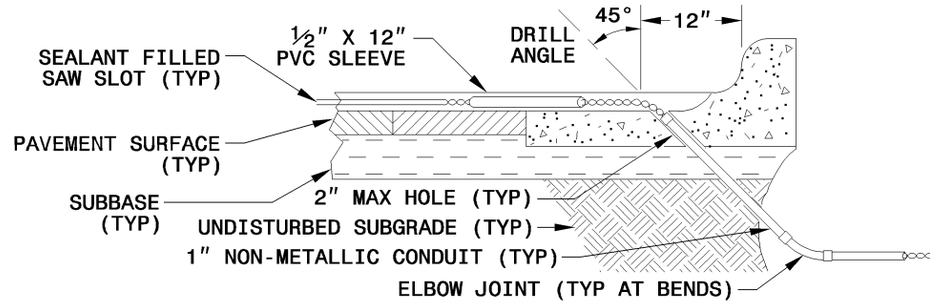

LOOP WIRE AT 18 INCH CURB & GUTTER SECTION

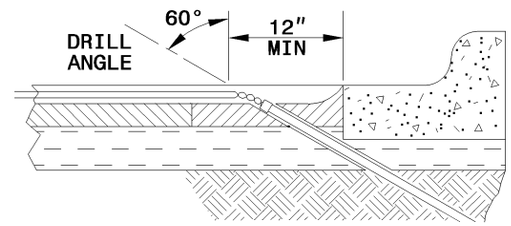

LOOP WIRE AT PAVEMENT SECTION

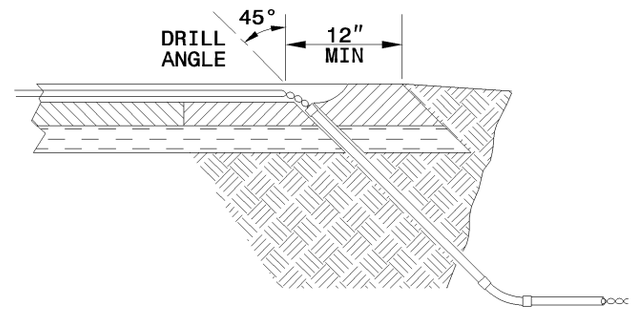

NOTES

1. DO NOT EXCAVATE UNDER CURB AND GUTTER SECTIONS FOR CONDUIT INSTALLATION.
2. INSTALL TWISTED LOOP WIRE TAIL SECTIONS THROUGH CONDUIT.
3. BEFORE SEALING LOOPS, PLUG CONDUIT TO PROVIDE A WATER PROOF BARRIER AND PREVENT LOOP SEALANT FROM ENTERING CONDUIT WHERE LOOP WIRE LEAVES PAVEMENT SURFACE.

STATE OF
NORTH CAROLINA
DEPT. OF TRANSPORTATION
DIVISION OF HIGHWAYS
RALEIGH, N.C.

7-06

ENGLISH STANDARD DRAWING FOR
INDUCTIVE DETECTION LOOPS
LOOP WIRE DETAILS

SHEET 2 OF 3

1725.01