STATE OF
NORTH CAROLINA
DEPT. OF TRANSPORTATION
DIVISION OF HIGHWAYS
RALEIGH, N.C.

1-12

ENGLISH STANDARD DRAWING FOR

ELECTRICAL SERVICE OPTIONS

GROUND MOUNTED SERVICE EQUIPMENT OPTIONS FOR UNDERGROUND ELECTRICAL SERVICE

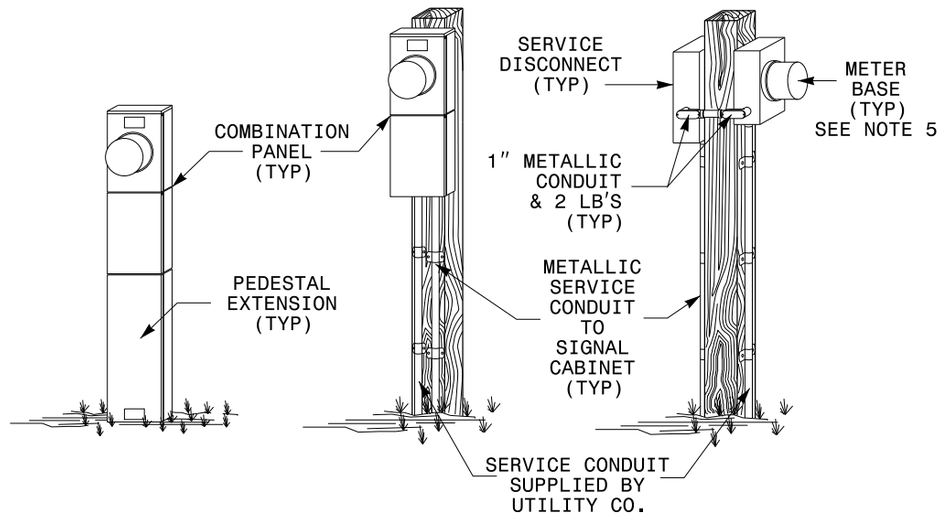

COMBINATION PANEL WITH PEDESTAL EXTENSION

COMBINATION PANEL OR METER BASE AND DISCONNECT SURFACE MOUNTED ON 6"X6" TREATED WOOD POST

NOTES

1. LOCATE THE SERVICE EQUIPMENT NEAR THE SIGNAL CABINET IN A MANNER THAT WILL ALLOW EASY ACCESS TO THE SERVICE DISCONNECT. LOCATE SERVICE EQUIPMENT SO AS NOT TO OBSTRUCT SIGHT DISTANCE OF VEHICLES TURNING RIGHT ON RED.
2. FOR GROUND MOUNTED ELECTRICAL SERVICE INSTALLATIONS WHEN POST MOUNTING IS CHOSEN, INSTALL TREATED WOOD POSTS A MINIMUM OF 3 FEET INTO THE GROUND.
3. INSTALL ALL METER BASES MOUNTED IN PEDESTALS AT A HEIGHT NOT TO EXCEED 5 FEET AS MEASURED FROM THE CENTER OF THE METER. INSTALL ALL OTHER METER BASES AT A HEIGHT BETWEEN 4 FEET AND 5 FEET AS MEASURED FROM THE CENTER OF THE METER. SEAL ANY UNUSED MOUNTING HOLES ON COMBINATION PANELS, METER BASES AND SERVICE DISCONNECTS.
4. INSTALL OVERHEAD ELECTRICAL SERVICE ON POLES AS SHOWN WHEN UNDERGROUND SOURCE IS NOT AN OPTION. COMBINATION PANELS, OR METER BASES AND SERVICE DISCONNECTS, MAY BE INSTALLED ON POLES WHEN POLE MOUNTED SIGNAL CABINETS ARE REQUIRED FOR THE INSTALLATION. DO NOT ROUTE UNFUSED OVERHEAD ELECTRICAL SERVICE CONDUCTOR INSIDE OF METAL POLES.
5. TYPICAL POINT OF DELIVERY FOR UNDERGROUND SERVICE IS INSIDE OF METER BASE. TYPICAL POINT OF DELIVERY FOR OVERHEAD SERVICE IS AT THE WEATHERHEAD ENTRANCE AT THE TOP OF THE SERVICE RISER.

SHEET 1 OF 2

1700.01

POLE MOUNTED SERVICE EQUIPMENT OPTIONS FOR OVERHEAD ELECTRICAL SERVICE

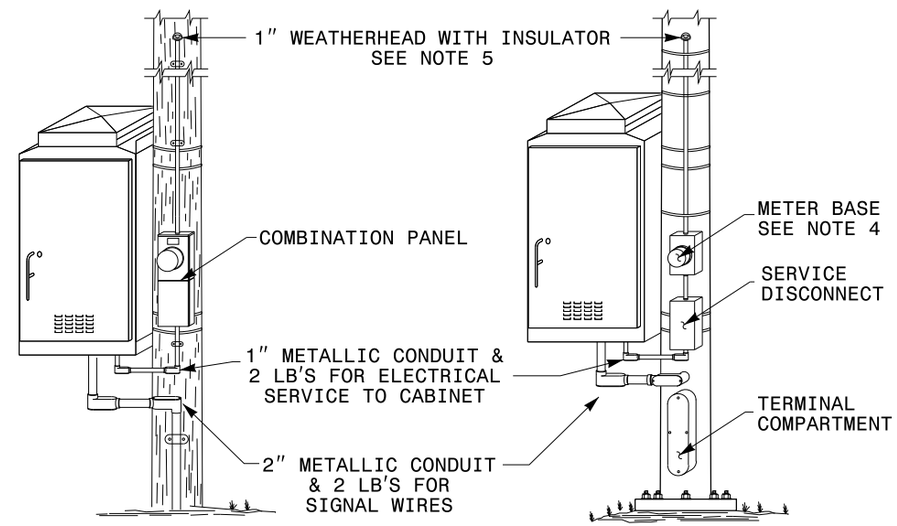

WOOD POLE

METAL POLE

1-12

STATE OF
NORTH CAROLINA
DEPT. OF TRANSPORTATION
DIVISION OF HIGHWAYS
RALEIGH, N.C.

ENGLISH STANDARD DRAWING FOR

ELECTRICAL SERVICE OPTIONS

SHEET 1 OF 2

1700.01

STATE OF
NORTH CAROLINA
DEPT. OF TRANSPORTATION
DIVISION OF HIGHWAYS
RALEIGH, N.C.

1-12

ENGLISH STANDARD DRAWING FOR

ELECTRICAL SERVICE OPTIONS

TYPICAL ELECTRICAL CONNECTION DETAIL FOR OVERHEAD SERVICE INSTALLATION (SHOWN WITH METER BASE/SERVICE DISCONNECT OPTION AND WITH GROUNDING ELECTRODE CONDUCTOR TERMINATED IN DISCONNECT)

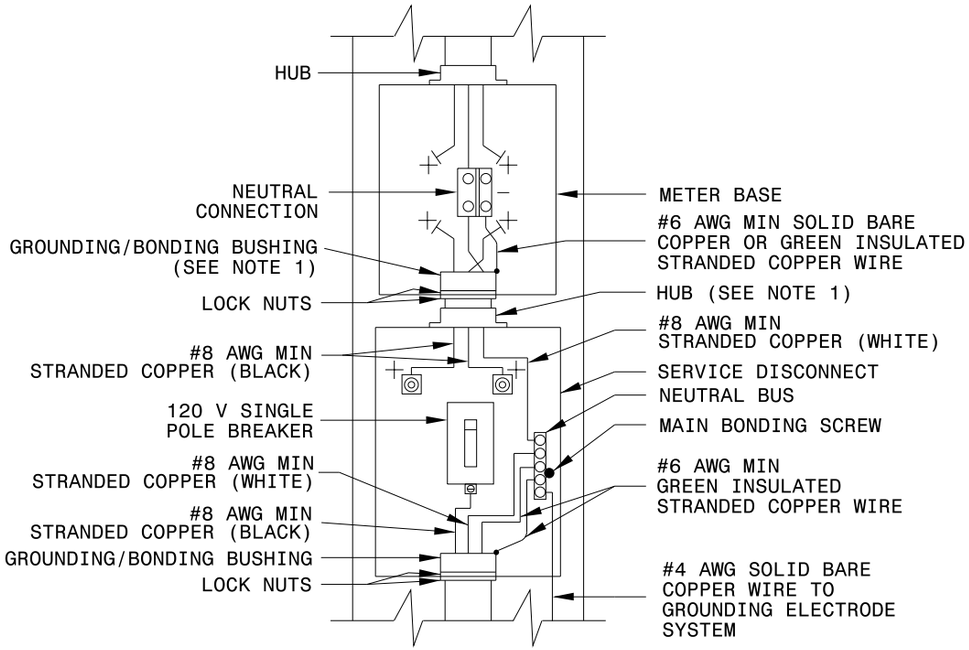

NOTES

1. WHEN USING A HUB LISTED AS A GROUNDING HUB (UL TYPES DWTT AND KDER), THE BONDING BUSHING IN THE METER BASE IS NOT NECESSARY.

ALTERNATE ELECTRICAL CONNECTION DETAIL FOR OVERHEAD SERVICE INSTALLATION (SHOWN WITH METER BASE/SERVICE DISCONNECT OPTION AND WITH GROUNDING ELECTRODE CONDUCTOR TERMINATED IN METER)

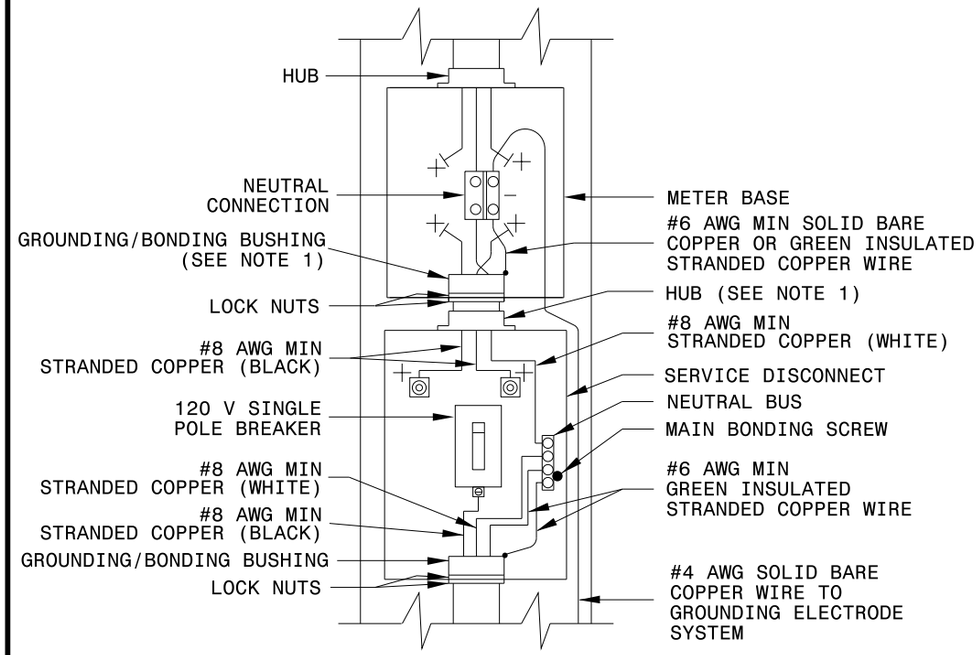

STATE OF
NORTH CAROLINA
DEPT. OF TRANSPORTATION
DIVISION OF HIGHWAYS
RALEIGH, N.C.

1-12

ENGLISH STANDARD DRAWING FOR

ELECTRICAL SERVICE OPTIONS

SHEET 2 OF 2
1700.01

STATE OF
NORTH CAROLINA
DEPT. OF TRANSPORTATION
DIVISION OF HIGHWAYS
RALEIGH, N.C.

1-12

ENGLISH STANDARD DRAWING FOR

ELECTRICAL SERVICE GROUNDING

MULTIPLE AND SECTIONAL ELECTRODES

SHEET 1 OF 2

1700.02

MULTIPLE ELECTRODES

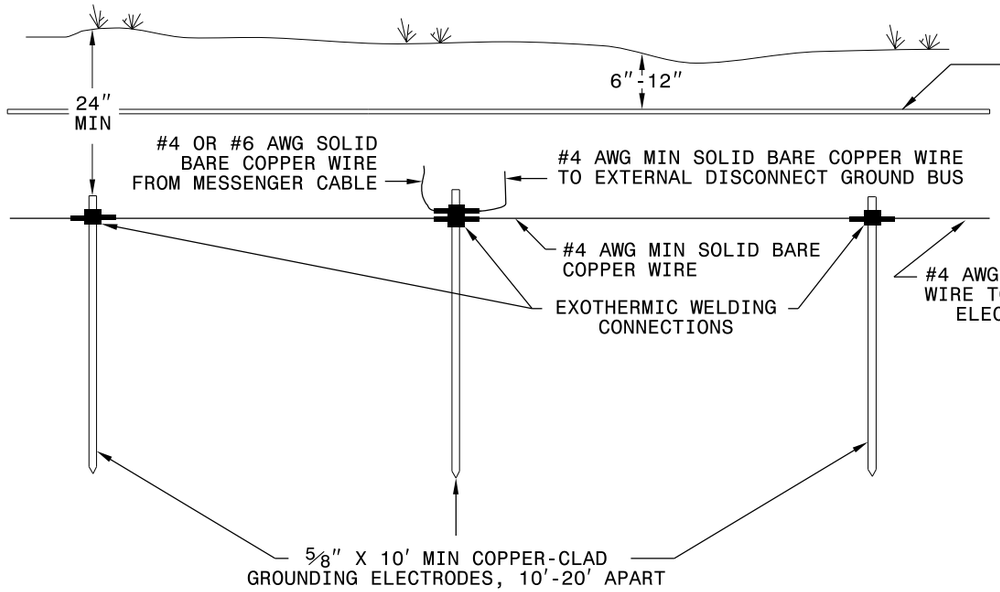

SECTIONAL ELECTRODES

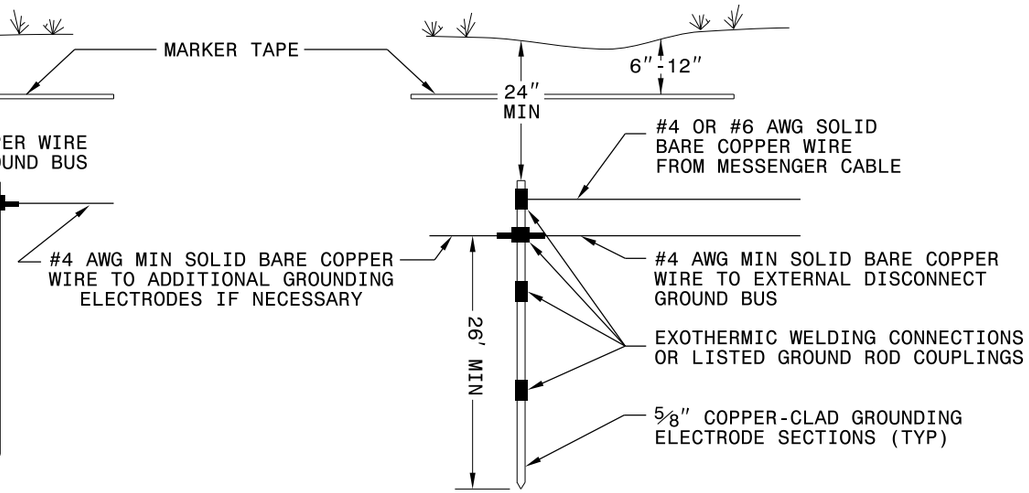

UNRESTRICTED SHOULDER

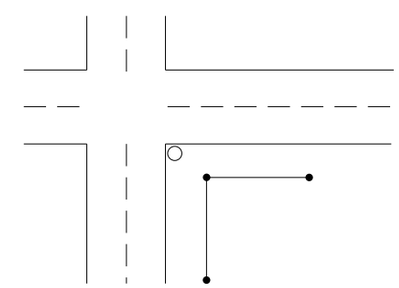

PLACE GROUNDING ELECTRODES AT 90°

LIMITED SHOULDER

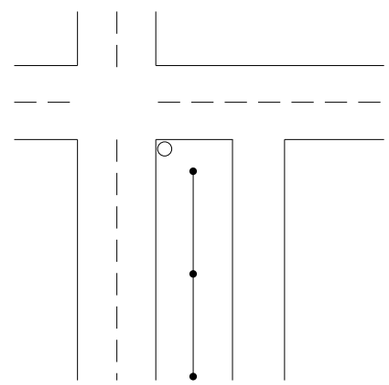

RESTRICTED SPACE

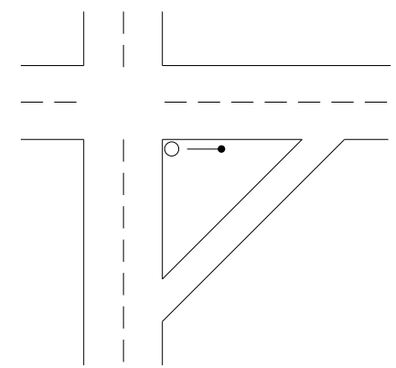

PLACE GROUNDING ELECTRODES IN A STRAIGHT LINE

STATE OF
NORTH CAROLINA
DEPT. OF TRANSPORTATION
DIVISION OF HIGHWAYS
RALEIGH, N.C.

1-12

ENGLISH STANDARD DRAWING FOR

ELECTRICAL SERVICE GROUNDING

MULTIPLE AND SECTIONAL ELECTRODES

SHEET 1 OF 2

1700.02

STATE OF
NORTH CAROLINA
DEPT. OF TRANSPORTATION
DIVISION OF HIGHWAYS
RALEIGH, N.C.

1-12

ENGLISH STANDARD DRAWING FOR

ELECTRICAL SERVICE GROUNDING

GROUNDING AND BONDING - WOOD POLES

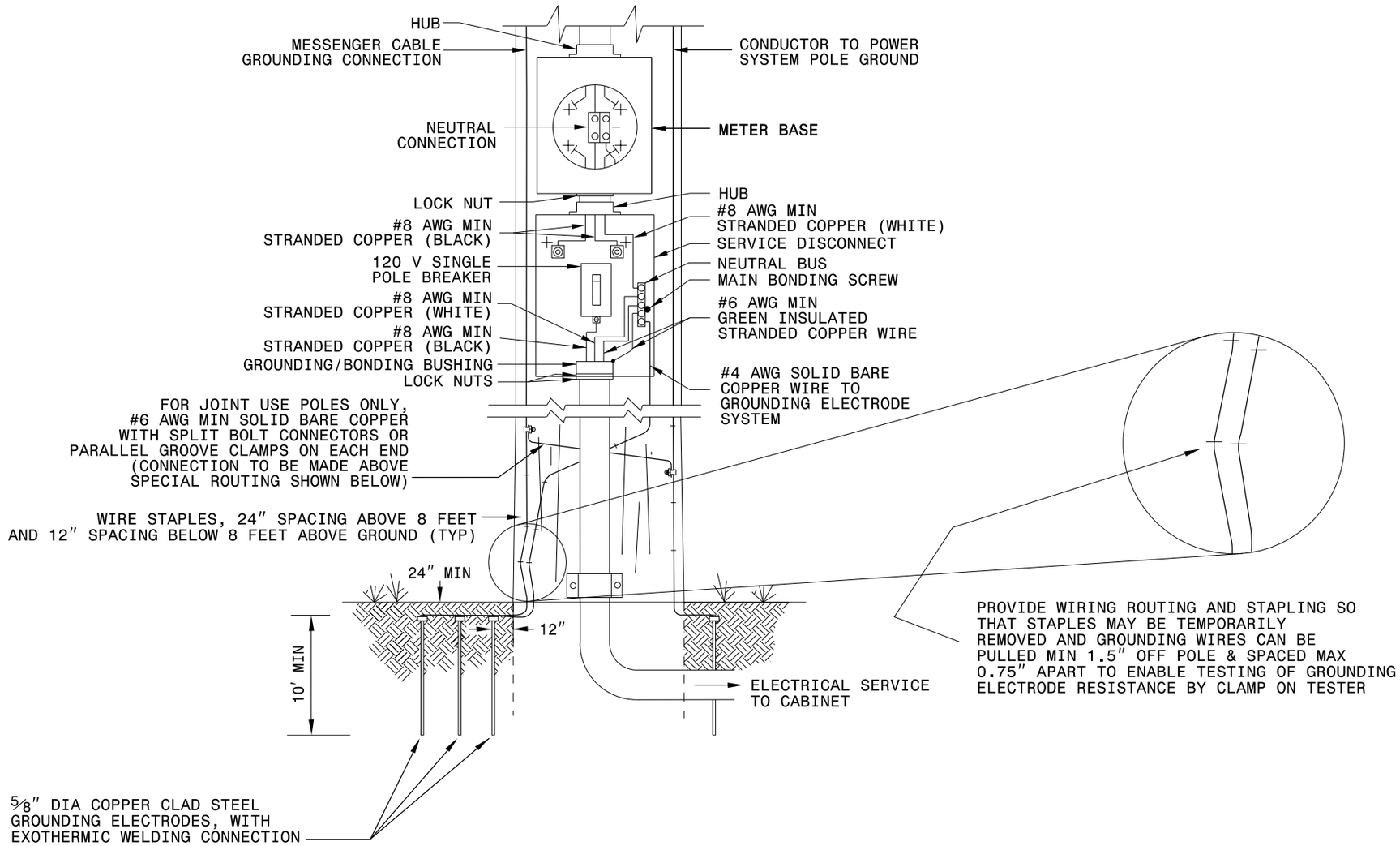

SHEET 2 OF 2

1700.02

STATE OF
NORTH CAROLINA
DEPT. OF TRANSPORTATION
DIVISION OF HIGHWAYS
RALEIGH, N.C.

1-12

ENGLISH STANDARD DRAWING FOR

ELECTRICAL SERVICE GROUNDING

GROUNDING AND BONDING - WOOD POLES

SHEET 2 OF 2

1700.02

STATE OF
NORTH CAROLINA
DEPT. OF TRANSPORTATION
DIVISION OF HIGHWAYS
RALEIGH, N.C.

1-12

ENGLISH STANDARD DRAWING FOR

SIGNAL HEADS

VEHICULAR SIGNAL HEADS

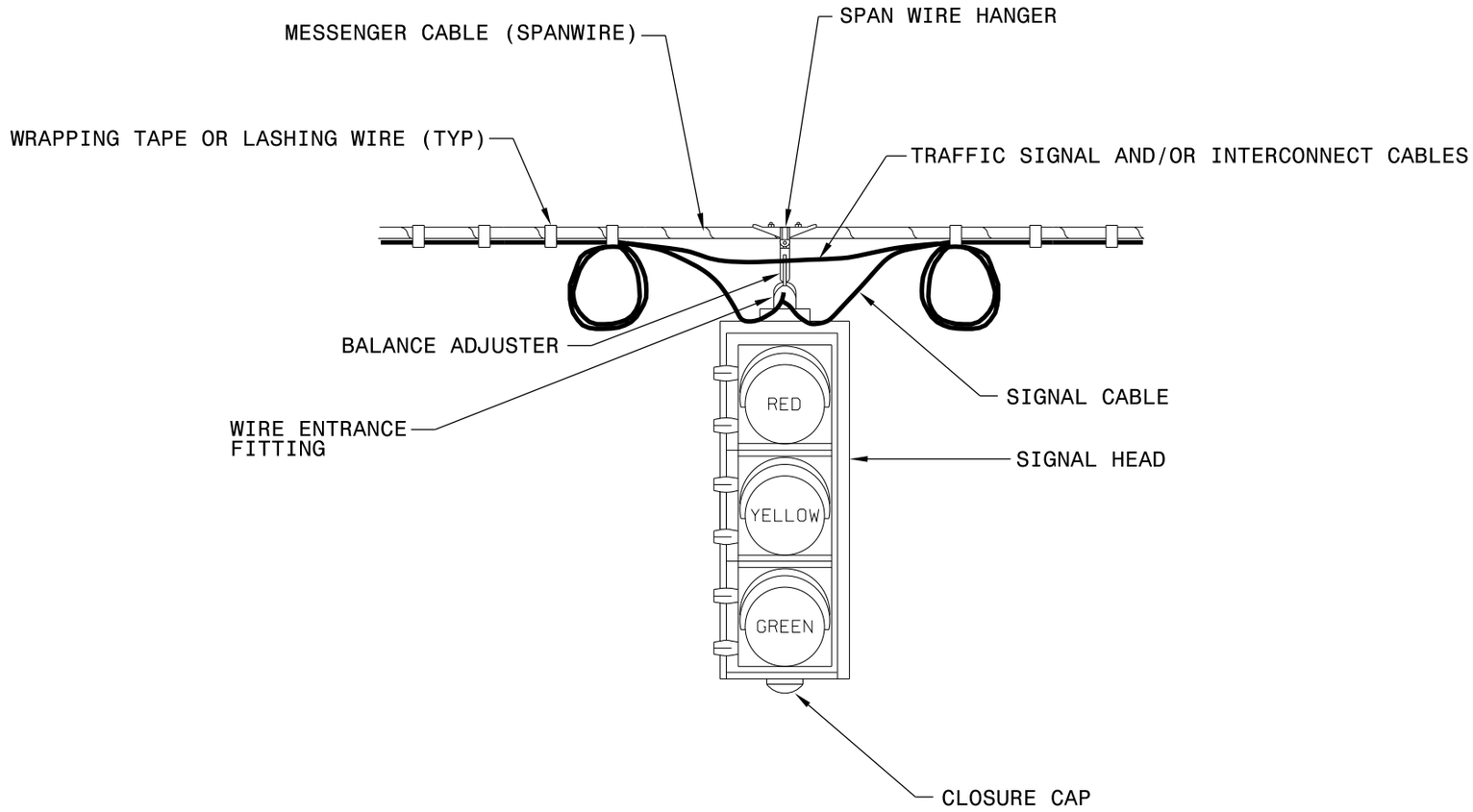

SHEET 1 OF 2

1705.01

STATE OF
NORTH CAROLINA
DEPT. OF TRANSPORTATION
DIVISION OF HIGHWAYS
RALEIGH, N.C.

1-12

ENGLISH STANDARD DRAWING FOR

SIGNAL HEADS

VEHICULAR SIGNAL HEADS

SHEET 1 OF 2

1705.01

STATE OF
NORTH CAROLINA
DEPT. OF TRANSPORTATION
DIVISION OF HIGHWAYS
RALEIGH, N.C.

1-12

ENGLISH STANDARD DRAWING FOR

SIGNAL HEADS

STANDARD SIGNAL FACE CLEARANCES

SHEET 2 OF 2

1705.01

STANDARD SIGNAL FACE CLEARANCES

RIGHT OF WAY PHASE

CLEARANCE PHASES

FROM \ TO	G	F Y	G ↙	R ↙	←	→	G ←	G →	R →	F Y	R	↓R	→R	WALK			DON'T WALK			OFF		ON	
	1	2	1	2	1	2	1	2	1	2	1	2	1	2	1	2	PED	1	2	PED	1	2	1	2	1	2	1	2
G	G	G			G	G	Y	R					G	G	G	G	Y	R			Y	R														
F Y			F Y	F Y					F Y	F Y													Y	R												
G ↙	Y	G	G				G ↙	G ←	Y ←	R ←											Y	R														
R ↙	Y	R	R				R ←	R ←	R ←	R ←											Y	R														
←			Y	R							←	←									Y	R	Y	R												
→													→	→						Y	R	Y	R			Y	R									
G ←															G	G ←					Y	R														
G →	G	Y	G														G →	G →	Y →	R →	Y	R														
R →	R	Y	R														R →	R →	R →	R →	R	Y	R													
F Y											F Y	F Y							F Y	F Y					Y	R										
R	R	R			R	R	R	R	R	R	R	R	R	R	R	R	R	R			R	R														
↓R			R	R					R	R													R	R												
→R											R	R							R	R					R	R										
WALK																											FDW	DW	DW	FDW	DW	DW				
DON'T WALK																											DW	DW	DW	DW	DW	DW				
OFF																																	OFF	OFF	ON	ON
ON																																	OFF	OFF	ON	ON

W - WALK
FDW - FLASHING DON'T WALK
DW - DON'T WALK
F Y - FLASHING YELLOW ARROW

STATE OF
NORTH CAROLINA
DEPT. OF TRANSPORTATION
DIVISION OF HIGHWAYS
RALEIGH, N.C.

1-12

ENGLISH STANDARD DRAWING FOR

SIGNAL HEADS

STANDARD SIGNAL FACE CLEARANCES

SHEET 2 OF 2

1705.01

STATE OF
NORTH CAROLINA
DEPT. OF TRANSPORTATION
DIVISION OF HIGHWAYS
RALEIGH, N.C.

1-12

ENGLISH STANDARD DRAWING FOR

SIGNAL HEADS

WOOD POLE MOUNTING

SHEET 1 OF 6

1705.02

FRONT VIEW

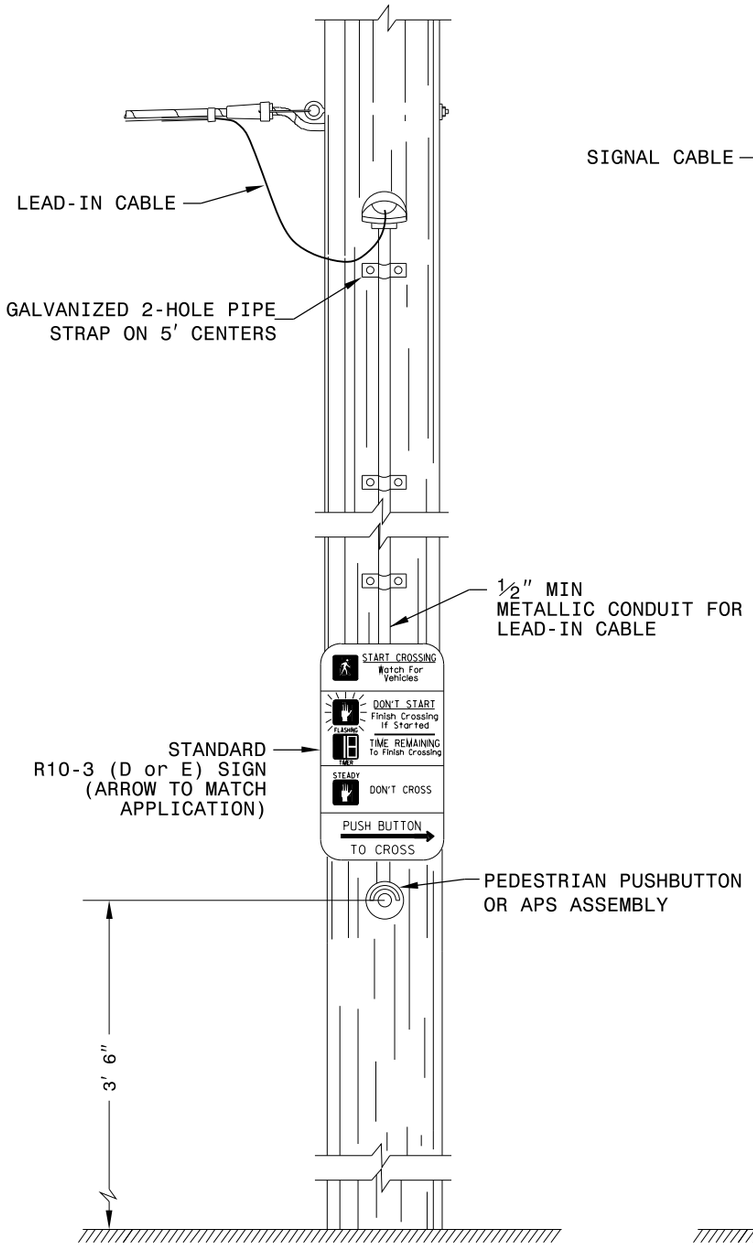

SIDE VIEW

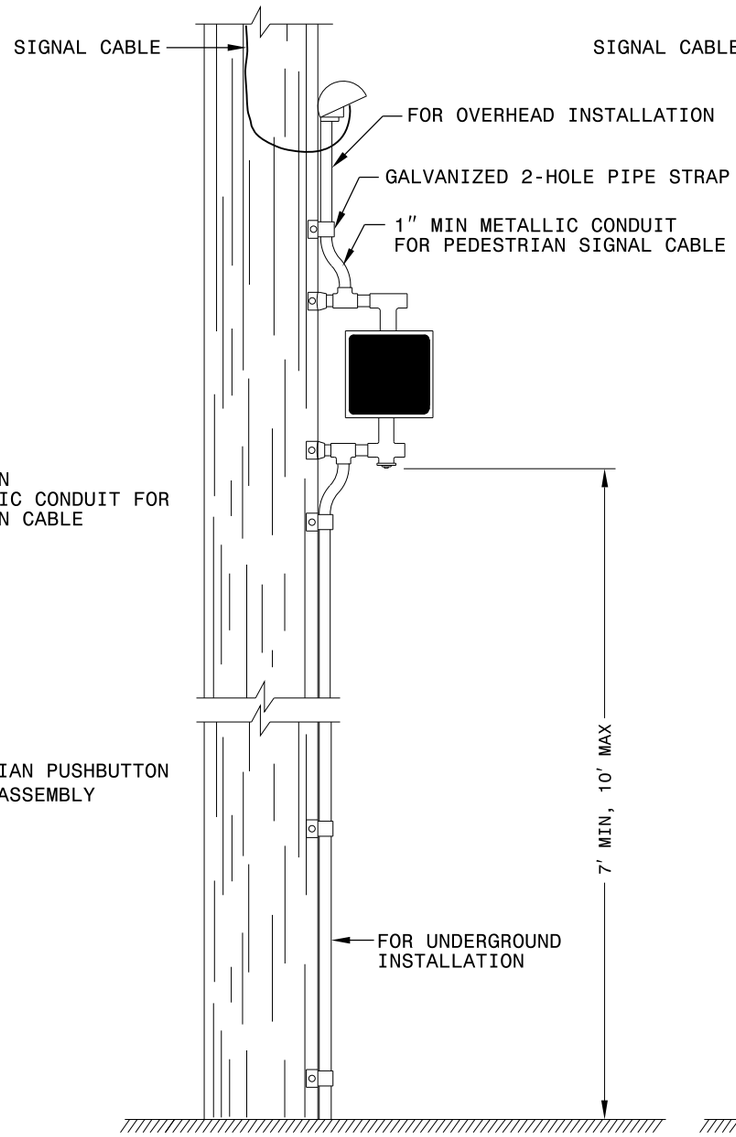

SIDE VIEW

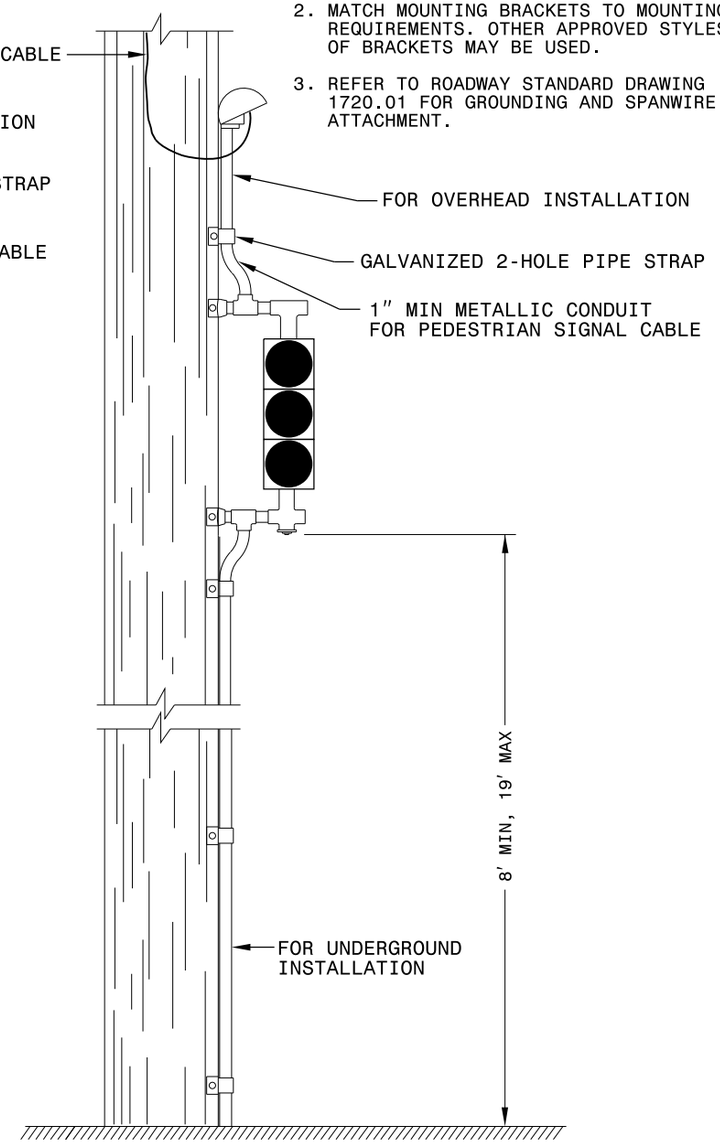

NOTES

1. CONNECT PUSHBUTTON TO CONTROLLER CABINET USING LEAD-IN CABLE. BOND PUSHBUTTON HOUSING AND ALL METAL COMPONENTS TO CABINET GROUND USING CABLE GROUND.
2. MATCH MOUNTING BRACKETS TO MOUNTING REQUIREMENTS. OTHER APPROVED STYLES OF BRACKETS MAY BE USED.
3. REFER TO ROADWAY STANDARD DRAWING 1720.01 FOR GROUNDING AND SPANWIRE ATTACHMENT.

STATE OF
NORTH CAROLINA
DEPT. OF TRANSPORTATION
DIVISION OF HIGHWAYS
RALEIGH, N.C.

1-12

ENGLISH STANDARD DRAWING FOR

SIGNAL HEADS

WOOD POLE MOUNTING

SHEET 1 OF 6

1705.02

STATE OF
NORTH CAROLINA
DEPT. OF TRANSPORTATION
DIVISION OF HIGHWAYS
RALEIGH, N.C.

1-12

ENGLISH STANDARD DRAWING FOR

SIGNAL HEADS

PEDESTRIAN ASSEMBLIES - STEEL POLE MOUNTING

SHEET 2 OF 6

1705.02

PREFERRED

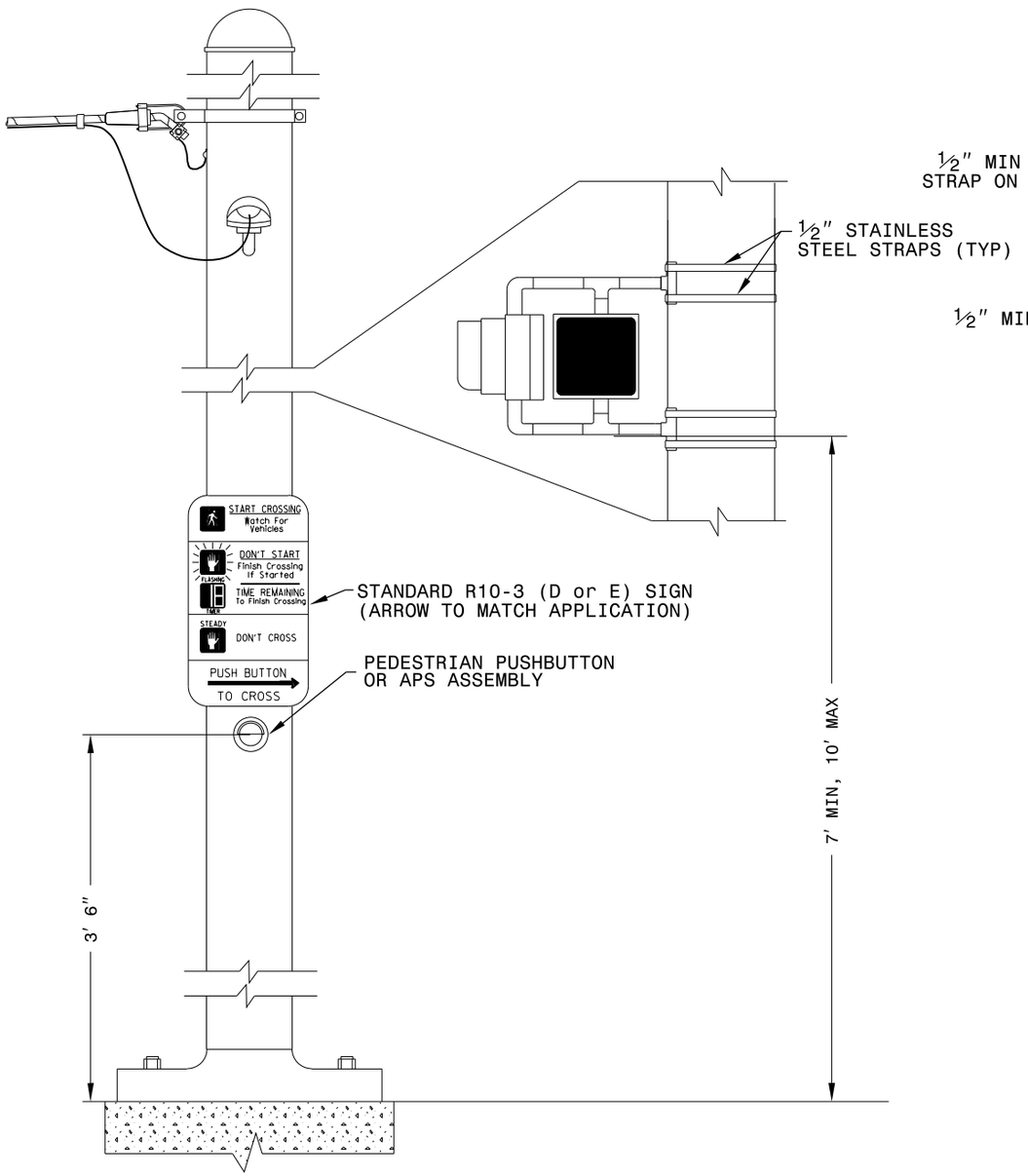

ALTERNATE

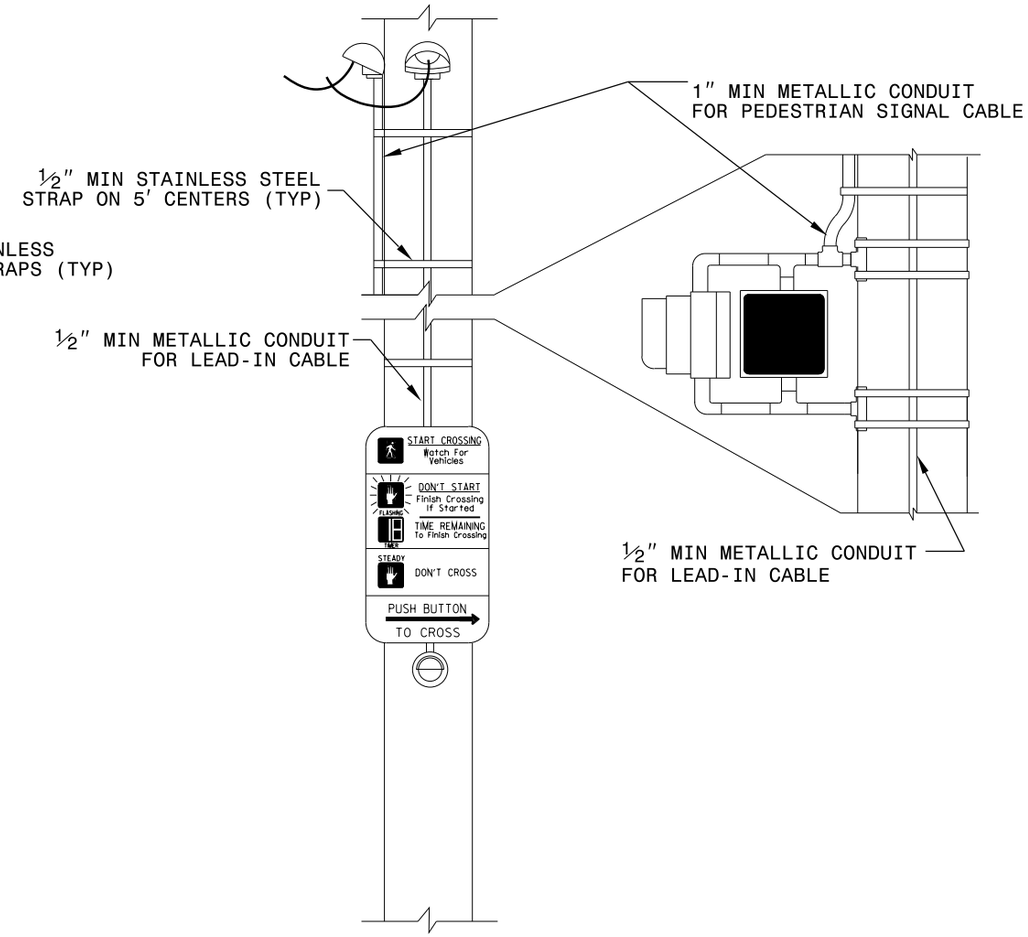

NOTES

1. CONNECT PUSHBUTTON TO CONTROLLER CABINET USING LEAD-IN CABLE (INSIDE POLE FOR PREFERRED MOUNTING). BOND PUSHBUTTON HOUSING TO CABINET GROUND USING CABLE GROUND.
2. BOND METAL POLE AT CABINET LOCATION TO CABINET GROUND USING #14 AWG TYPE THWN.
3. MATCH MOUNTING BRACKETS TO MOUNTING REQUIREMENTS. OTHER APPROVED STYLES OF BRACKETS MAY BE USED.

STATE OF
NORTH CAROLINA
DEPT. OF TRANSPORTATION
DIVISION OF HIGHWAYS
RALEIGH, N.C.

1-12

ENGLISH STANDARD DRAWING FOR

SIGNAL HEADS

PEDESTRIAN ASSEMBLIES - STEEL POLE MOUNTING

SHEET 2 OF 6

1705.02

STATE OF
NORTH CAROLINA
DEPT. OF TRANSPORTATION
DIVISION OF HIGHWAYS
RALEIGH, N.C.

1-12

ENGLISH STANDARD DRAWING FOR

SIGNAL HEADS

VEHICLE ASSEMBLIES - STEEL POLE MOUNTING

SHEET 3 OF 6

1705.02

PREFERRED

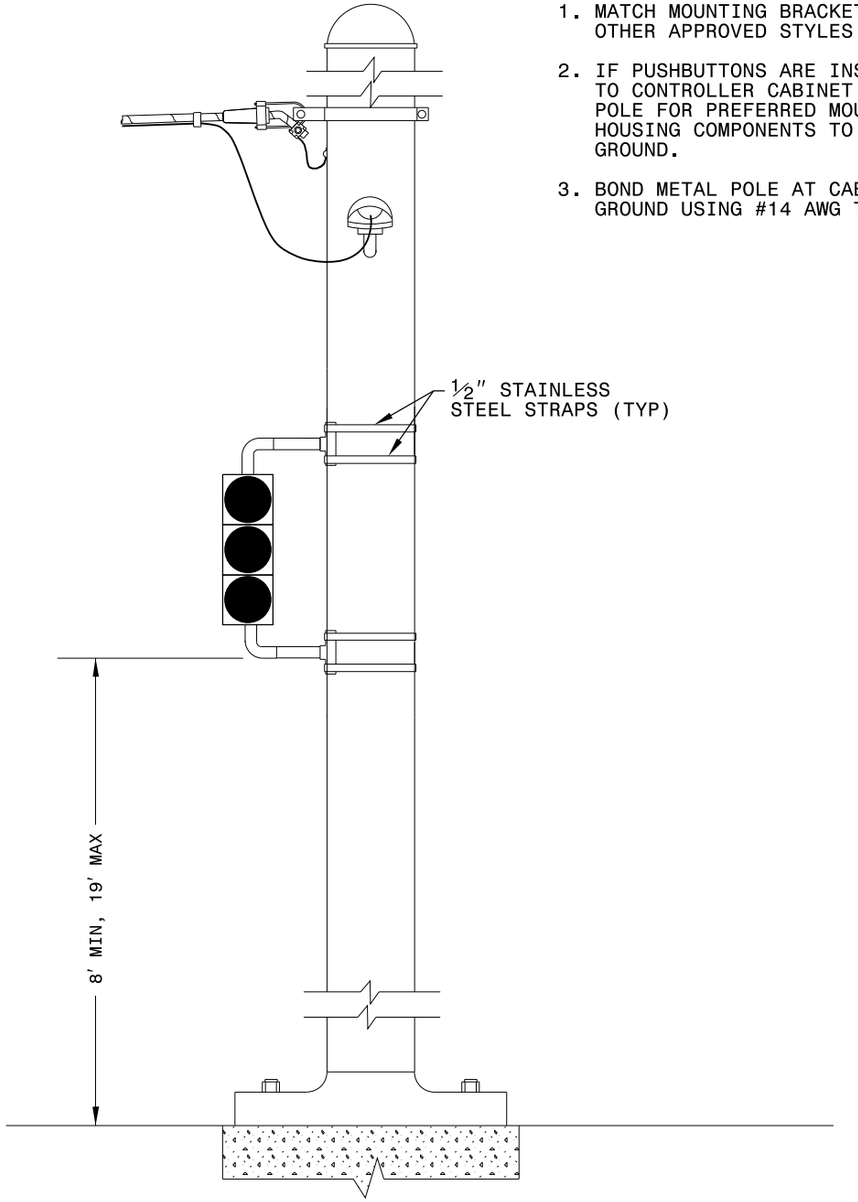

NOTES

1. MATCH MOUNTING BRACKETS TO MOUNTING REQUIREMENTS. OTHER APPROVED STYLES OF BRACKETS MAY BE USED.
2. IF PUSHBUTTONS ARE INSTALLED, CONNECT PUSHBUTTON TO CONTROLLER CABINET USING LEAD-IN CABLE (INSIDE POLE FOR PREFERRED MOUNTING). BOND PUSHBUTTON HOUSING COMPONENTS TO CABINET GROUND USING CABLE GROUND.
3. BOND METAL POLE AT CABINET LOCATION TO CABINET GROUND USING #14 AWG TYPE THWN.

ALTERNATE

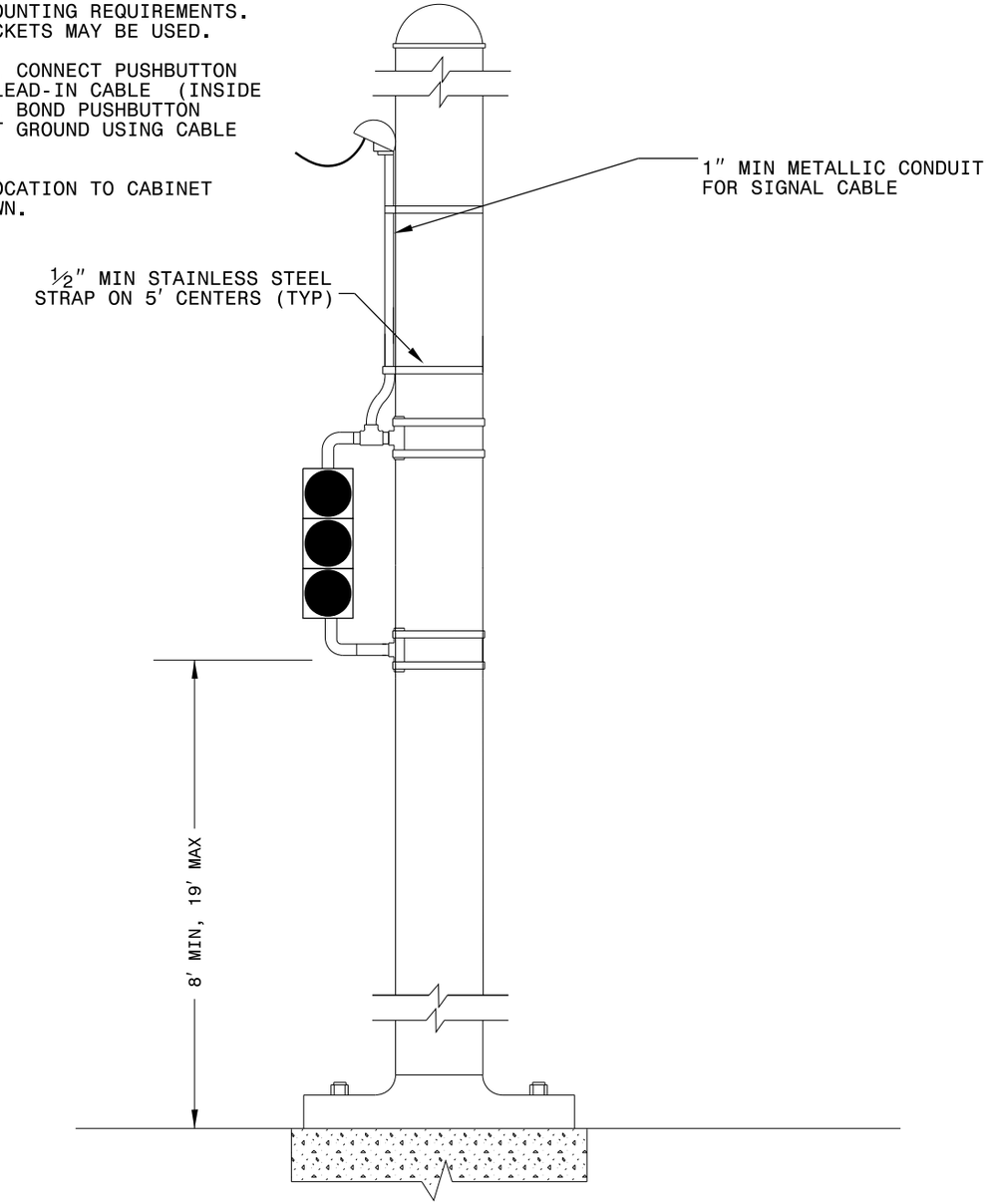

STATE OF
NORTH CAROLINA
DEPT. OF TRANSPORTATION
DIVISION OF HIGHWAYS
RALEIGH, N.C.

1-12

ENGLISH STANDARD DRAWING FOR

SIGNAL HEADS

VEHICLE ASSEMBLIES - STEEL POLE MOUNTING

SHEET 3 OF 6

1705.02

STATE OF
NORTH CAROLINA
DEPT. OF TRANSPORTATION
DIVISION OF HIGHWAYS
RALEIGH, N.C.

1-12

ENGLISH STANDARD DRAWING FOR

SIGNAL HEADS

PEDESTRIAN ASSEMBLIES-PEDESTAL MOUNTING

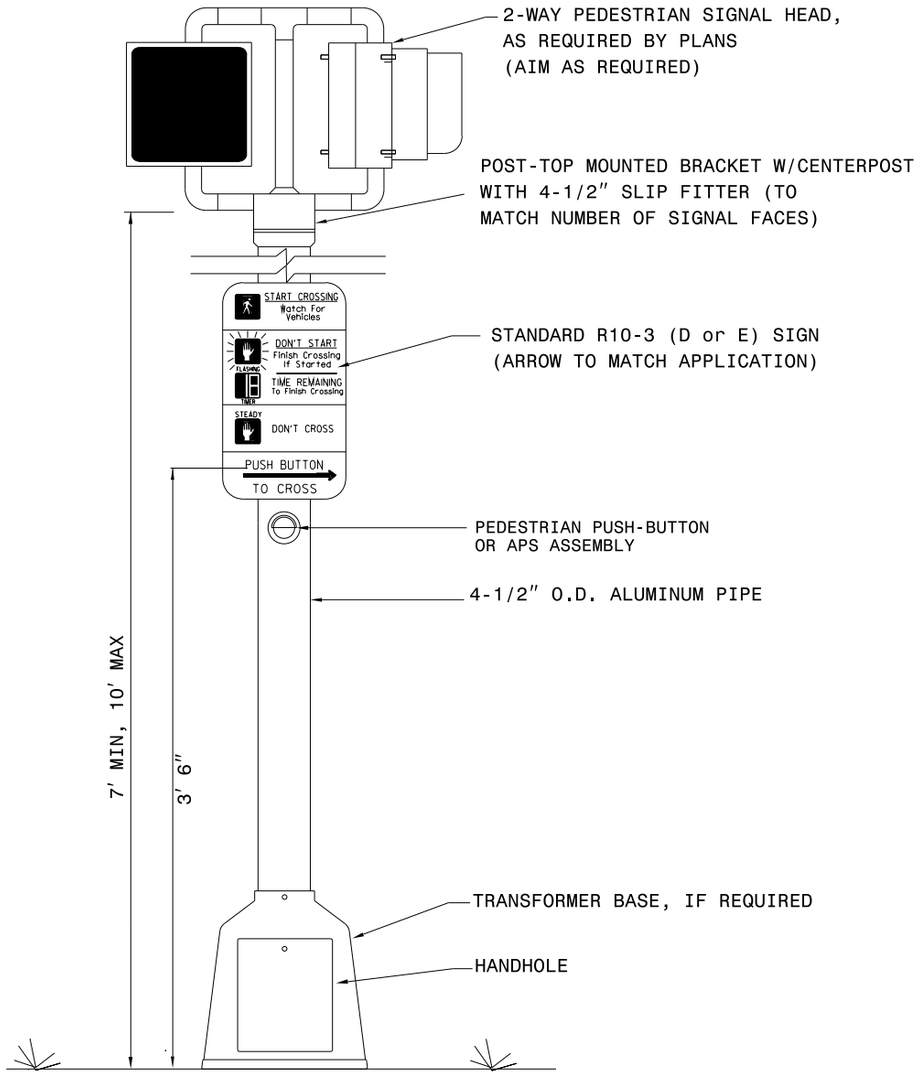

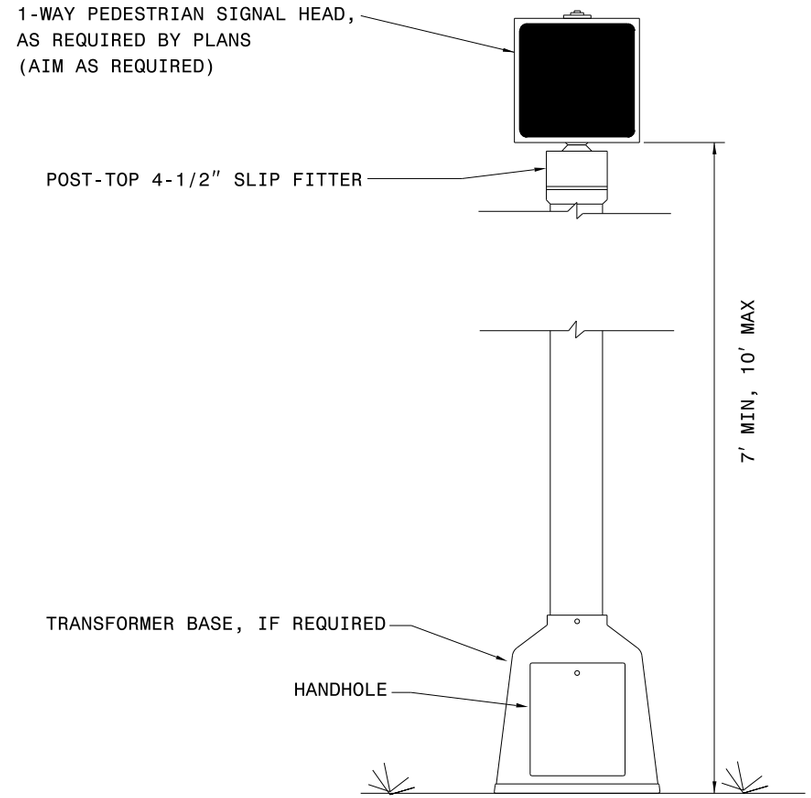

NOTE

1. CONNECT PUSHBUTTON TO CONTROLLER CABINET USING LEAD-IN CABLE. BOND PUSHBUTTON HOUSING AND ALL METAL COMPONENTS TO CABINET GROUND USING CABLE GROUND.
2. BOND PEDESTAL ASSEMBLY TO CABINET GROUND WITH #14 AWG TYPE THWN.
3. REFER TO ROADWAY STANDARD DRAWING 1743 FOR PEDESTAL INFORMATION.

STATE OF
NORTH CAROLINA
DEPT. OF TRANSPORTATION
DIVISION OF HIGHWAYS
RALEIGH, N.C.

1-12

ENGLISH STANDARD DRAWING FOR

SIGNAL HEADS

PEDESTRIAN ASSEMBLIES-PEDESTAL MOUNTING

SHEET 4 OF 6
1705.02

STATE OF
NORTH CAROLINA
DEPT. OF TRANSPORTATION
DIVISION OF HIGHWAYS
RALEIGH, N.C.

1-12

ENGLISH STANDARD DRAWING FOR

SIGNAL HEADS

PEDESTRIAN ASSEMBLIES - PUSHBUTTON POST MOUNTING

SHEET 5 OF 6

1705.02

SINGLE PUSHBUTTON

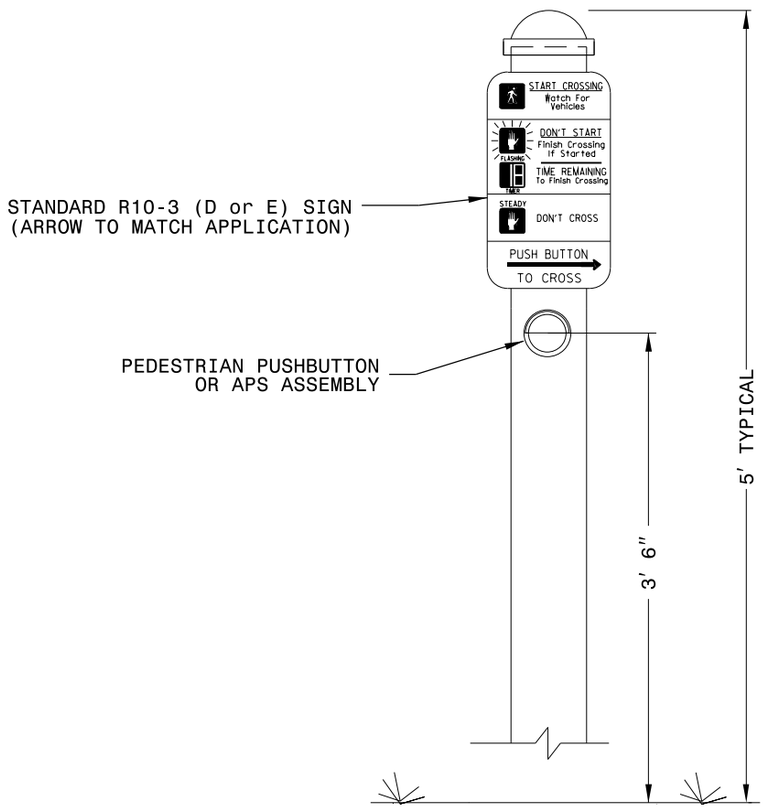

DUAL PUSHBUTTON

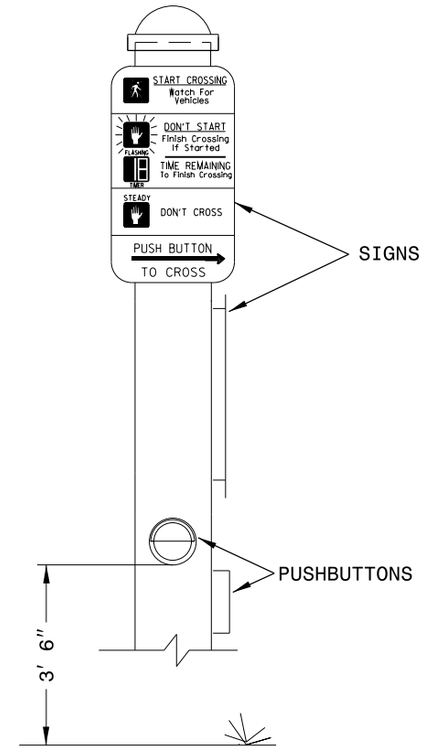

NOTES

1. CONNECT PUSHBUTTON TO CONTROLLER CABINET USING LEAD-IN CABLE. BOND PUSHBUTTON HOUSING AND ALL METAL COMPONENTS TO CABINET GROUND USING CABLE GROUND.

2. REFER TO ROADWAY STANDARD DRAWING 1743 FOR PEDESTAL INFORMATION.

STATE OF
NORTH CAROLINA
DEPT. OF TRANSPORTATION
DIVISION OF HIGHWAYS
RALEIGH, N.C.

1-12

ENGLISH STANDARD DRAWING FOR

SIGNAL HEADS

PEDESTRIAN ASSEMBLIES - PUSHBUTTON POST MOUNTING

SHEET 5 OF 6

1705.02

STATE OF
NORTH CAROLINA
DEPT. OF TRANSPORTATION
DIVISION OF HIGHWAYS
RALEIGH, N.C.

1-12

ENGLISH STANDARD DRAWING FOR

SIGNAL HEADS

VEHICLE ASSEMBLIES-PEDESTAL MOUNTING

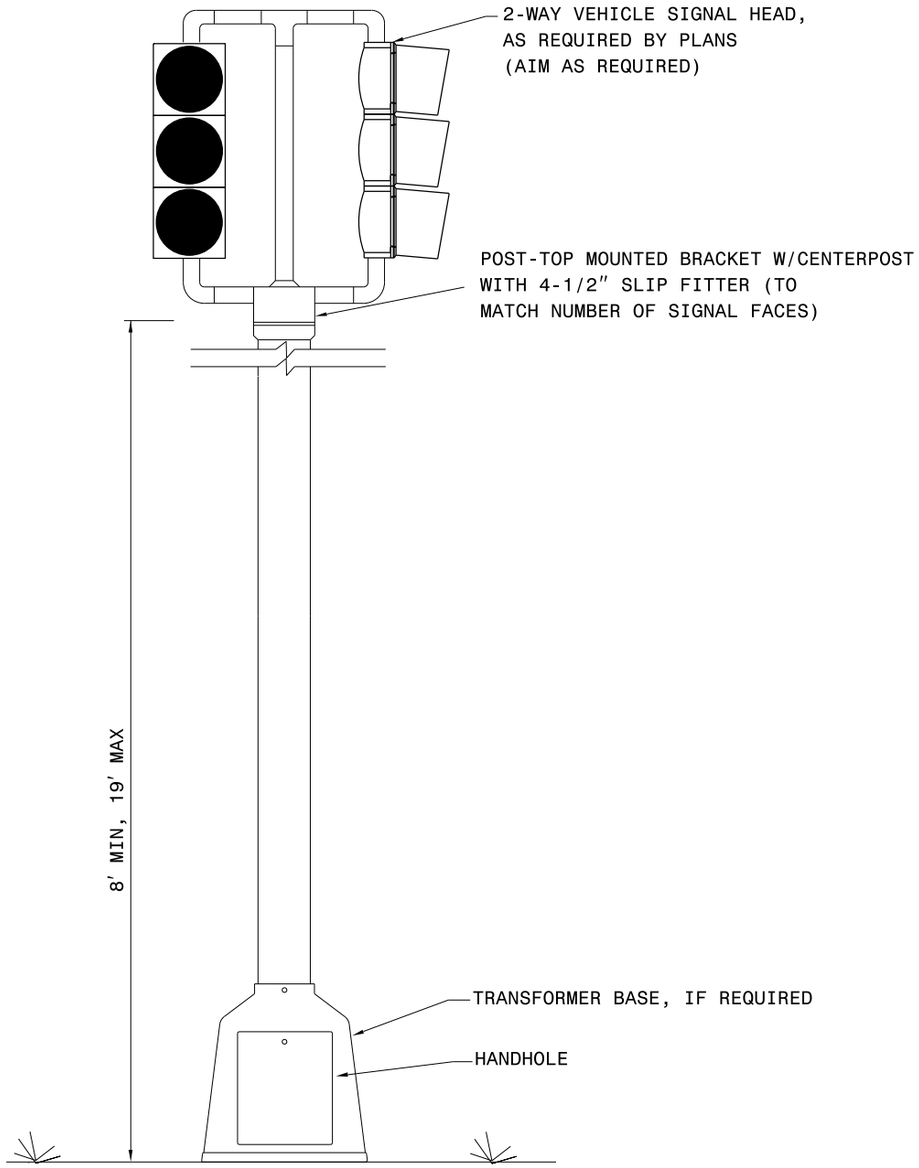

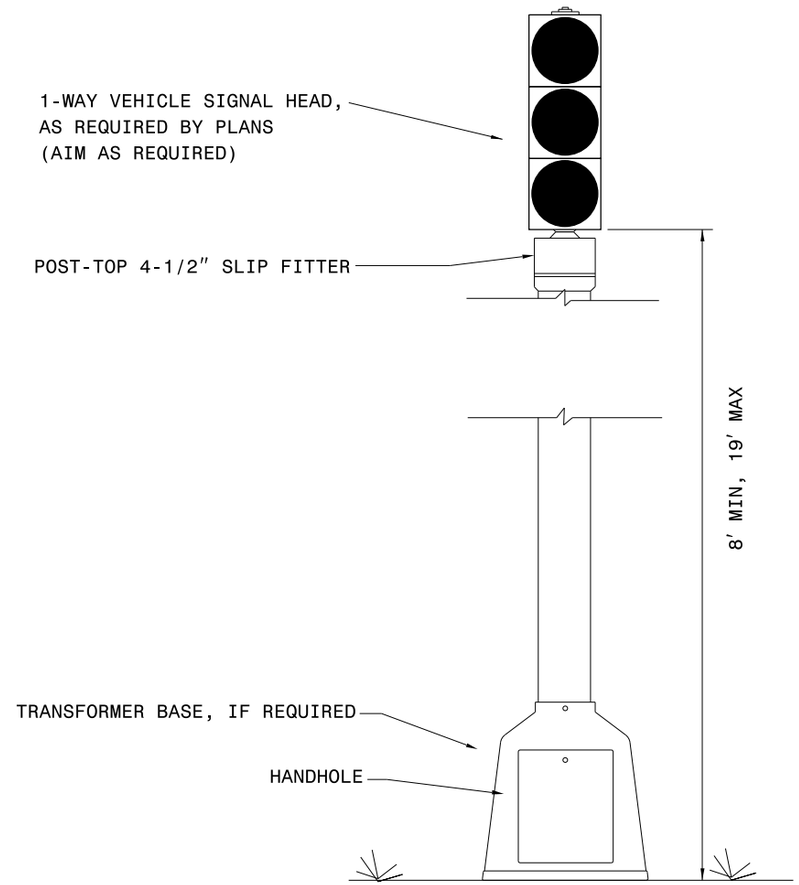

NOTE

1. IF PUSHBUTTONS ARE INSTALLED, CONNECT PUSHBUTTON TO CONTROLLER CABINET USING LEAD-IN CABLE. BOND PUSHBUTTON HOUSING TO CABINET GROUND USING CABLE GROUND.
2. BOND PEDESTAL ASSEMBLY TO CABINET GROUND WITH #14 AWG TYPE THWN.
3. REFER TO ROADWAY STANDARD DRAWING 1743 FOR PEDESTAL INFORMATION.

STATE OF
NORTH CAROLINA
DEPT. OF TRANSPORTATION
DIVISION OF HIGHWAYS
RALEIGH, N.C.

1-12

ENGLISH STANDARD DRAWING FOR

SIGNAL HEADS

VEHICLE ASSEMBLIES-PEDESTAL MOUNTING

SHEET 6 OF 6
1705.02

STATE OF
NORTH CAROLINA
DEPT. OF TRANSPORTATION
DIVISION OF HIGHWAYS
RALEIGH, N.C.

1-12

ENGLISH STANDARD DRAWING FOR

SIGNAL HEADS

WIRE COLOR CONVENTIONS

INDICATION TYPE/COLOR						
WIRE COLOR	3-SECTION CIRCULAR	3-SECTION ARROW	3-SECTION FYA	4-SECTION FYA	5-SECTION	PEDESTRIAN
RED	R				R	- DON'T WALK
YELLOW	Y		F Y	F Y	Y	
GREEN	G				G	- WALK
RED-BLACK STRIPE		R	R	R		
YELLOW-BLACK STRIPE		Y	Y	Y	Y	
GREEN-BLACK STRIPE		←		←	→	
WHITE	NEUTRAL					

SOLID OR STRIPED COLORS MAY BE USED ON HEADS WITH MIXED INDICATION TYPES. WHERE PRACTICAL, COORDINATE WIRE COLOR WITH INDICATION COLOR. WHERE INSULATION COLOR DOES NOT MATCH THE INDICATION COLOR OF VEHICULAR DISPLAYS, WRAP APPROPRIATELY COLORED TAPE OVER INSULATION NEAR TERMINATION POINTS.

SHEET 1 OF 1

1705.03

STATE OF
NORTH CAROLINA
DEPT. OF TRANSPORTATION
DIVISION OF HIGHWAYS
RALEIGH, N.C.

1-12

ENGLISH STANDARD DRAWING FOR

SIGNAL HEADS

WIRE COLOR CONVENTIONS

SHEET 1 OF 1

1705.03

STATE OF
NORTH CAROLINA
DEPT. OF TRANSPORTATION
DIVISION OF HIGHWAYS
RALEIGH, N.C.

1-12

ENGLISH STANDARD DRAWING FOR

UNDERGROUND CONDUIT-TRENCHING

IN EXISTING PAVEMENT (NOT AT GUTTER)

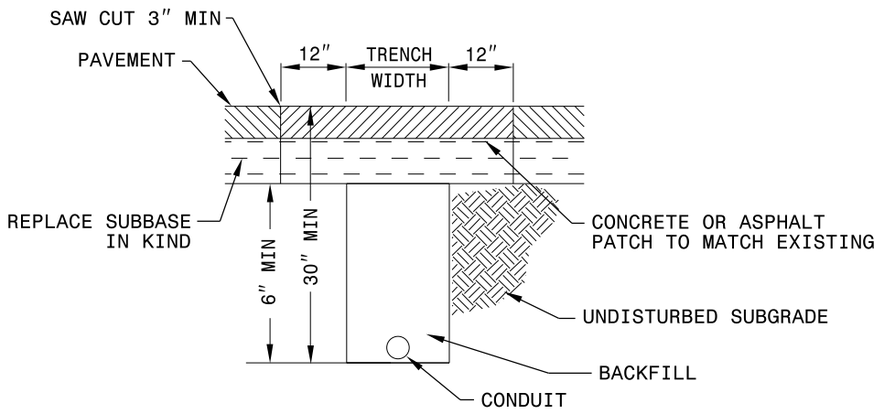

IN EXISTING PAVEMENT (AT GUTTER)

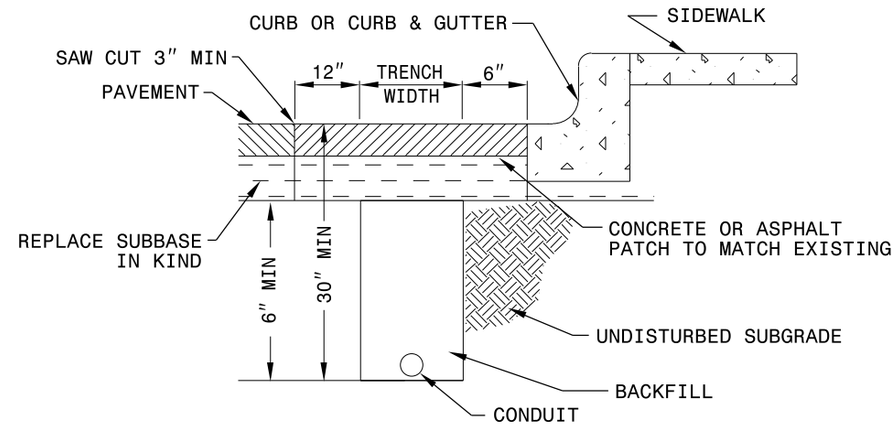

THE REMOVAL OF PAVEMENT BEYOND THE EDGES OF THE TRENCH, AS SHOWN, WILL NOT BE REQUIRED IF SAID EDGES ARE SAW CUT AND MAINTAINED NEATLY WITH NO SHATTER.

IN SIDEWALK OR DRIVEWAY

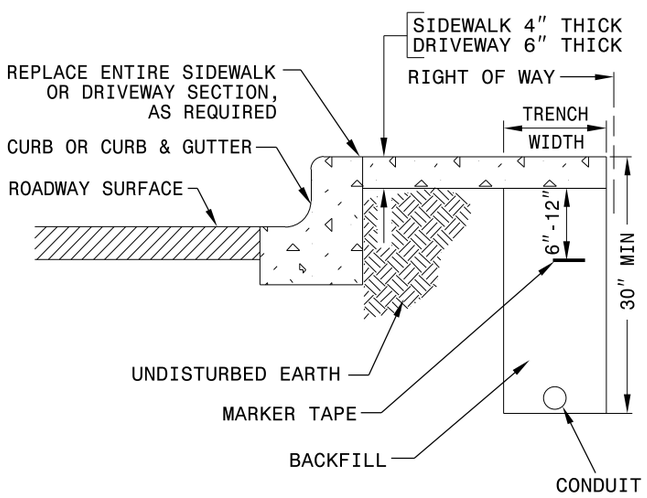

IN NEW PAVEMENT

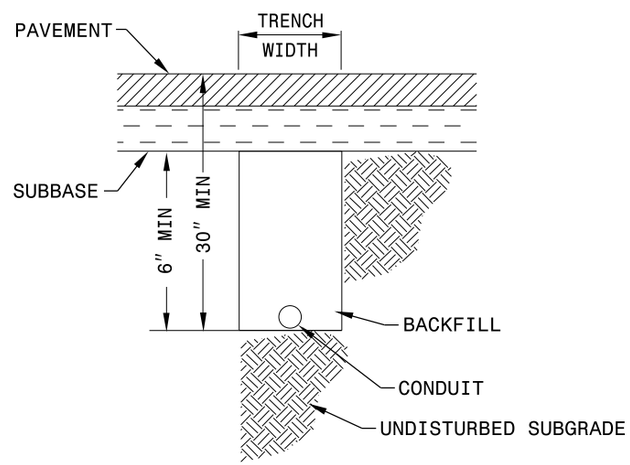

IN EARTH

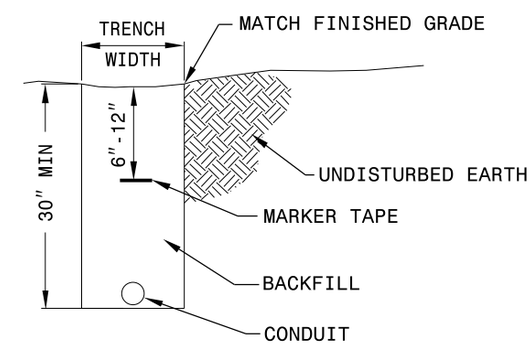

NOTE

DIG TRENCH WIDE ENOUGH TO ACCEPT THE REQUIRED CONDUITS AND TO PERMIT PROPER COMPACTION.

STATE OF
NORTH CAROLINA
DEPT. OF TRANSPORTATION
DIVISION OF HIGHWAYS
RALEIGH, N.C.

1-12

ENGLISH STANDARD DRAWING FOR

UNDERGROUND CONDUIT-TRENCHING

SHEET 1 OF 2
1715.01

STATE OF
NORTH CAROLINA
DEPT. OF TRANSPORTATION
DIVISION OF HIGHWAYS
RALEIGH, N.C.

1-12

ENGLISH STANDARD DRAWING FOR

UNDERGROUND CONDUIT-TRENCHING

SHEET 2 OF 2

1715.01

NOTE

THE CONTRACTOR, WITH APPROVAL FROM THE ENGINEER, MAY ADJUST FINAL BURIAL DEPTH OF CONDUIT(S) IN ORDER TO TRAVERSE NON-MOVABLE OBJECTS.

CONDUIT TRENCHING

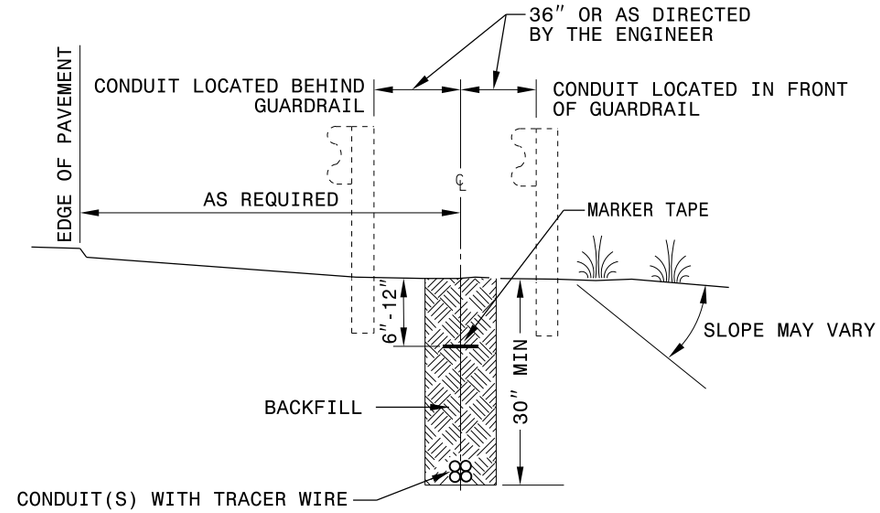

CONDUIT TRENCHING AROUND NON-MOVABLE OBJECT

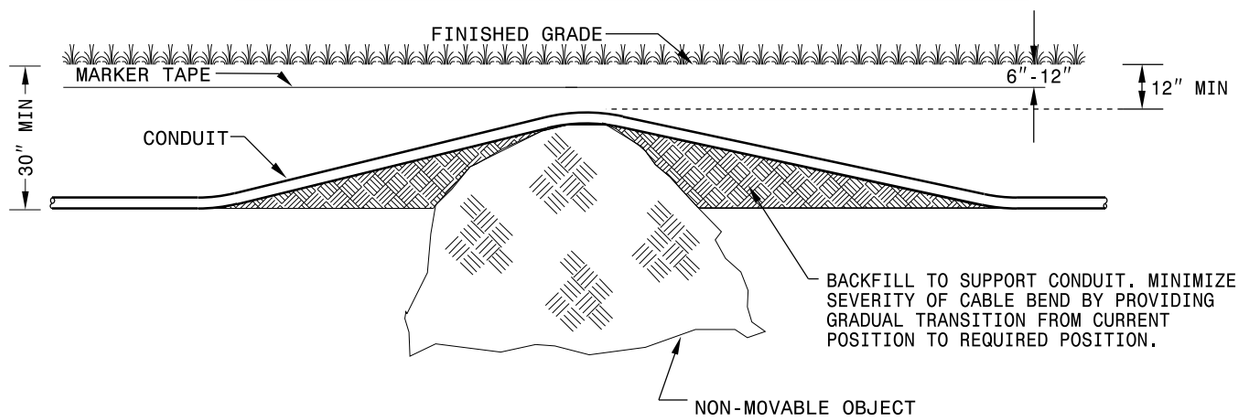

STATE OF
NORTH CAROLINA
DEPT. OF TRANSPORTATION
DIVISION OF HIGHWAYS
RALEIGH, N.C.

1-12

ENGLISH STANDARD DRAWING FOR

UNDERGROUND CONDUIT-TRENCHING

SHEET 2 OF 2

1715.01

STATE OF
NORTH CAROLINA
DEPT. OF TRANSPORTATION
DIVISION OF HIGHWAYS
RALEIGH, N.C.

1-12

ENGLISH STANDARD DRAWING FOR

JUNCTION BOXES

INSTALLATION CROSS-SECTION

JUNCTION BOX OVER-SIZED

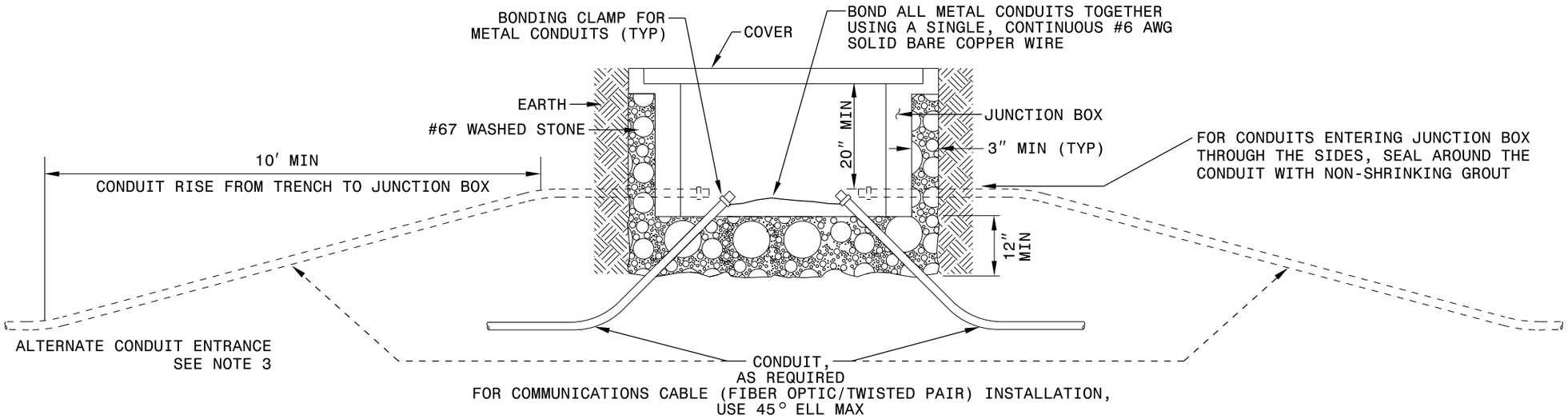

TOP VIEW OF COVER

STANDARD SIZE JUNCTION BOX

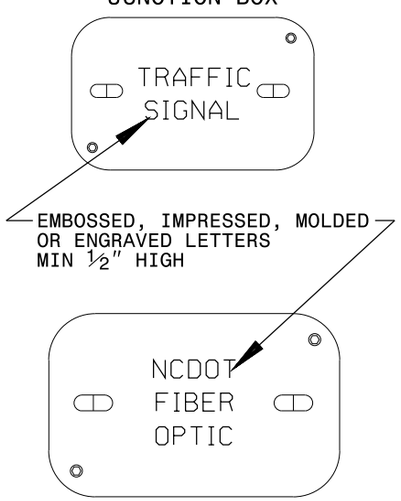

OVER-SIZED JUNCTION BOX

NOTES

1. OTHER STYLES OF JUNCTION BOXES WILL BE ACCEPTABLE PROVIDED THEY SATISFY REQUIREMENTS OF SECTION 1716 OF THE NCDOT STANDARD SPECIFICATIONS FOR ROADS AND STRUCTURES.
2. SECURE COVER WITH TWO HEX BOLTS.
3. INSTALL CONDUIT THROUGH BOTTOM OF JUNCTION BOX. AS AN ALTERNATIVE, CONDUIT MAY ENTER THROUGH "MOUSE HOLE" INTO SIDE OF JUNCTION BOX.
4. FOR CURB AND GUTTER SECTIONS, LOCATE JUNCTION BOXES A MINIMUM OF 6″ BEHIND BACK OF CURB AND FOR PAVEMENT SECTIONS A MINIMUM OF 2′ FROM PAVEMENT EDGE OR WITHIN RIGHT OF WAY.
5. COIL AND STORE 10′ OF TRACER WIRE IN ALL JUNCTION BOXES WITH FIBER OPTIC CABLE.

JUNCTION BOX STANDARD SIZE

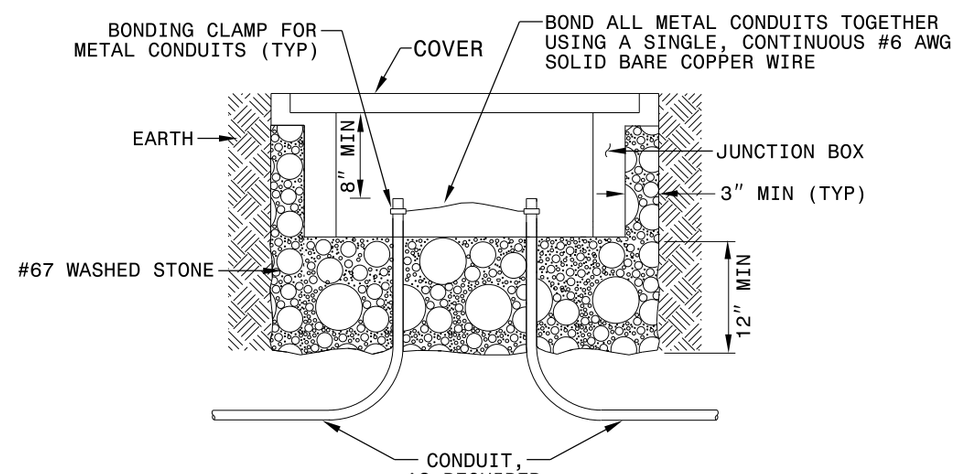

STATE OF
NORTH CAROLINA
DEPT. OF TRANSPORTATION
DIVISION OF HIGHWAYS
RALEIGH, N.C.

1-12

ENGLISH STANDARD DRAWING FOR

JUNCTION BOXES

SHEET 1 OF 1
1716.01

STATE OF
NORTH CAROLINA
DEPT. OF TRANSPORTATION
DIVISION OF HIGHWAYS
RALEIGH, N.C.

1-12

ENGLISH STANDARD DRAWING FOR

WOOD POLES

METHODS OF ATTACHMENT AND GROUNDING

TWO-BOLT METHOD (PREFERRED)

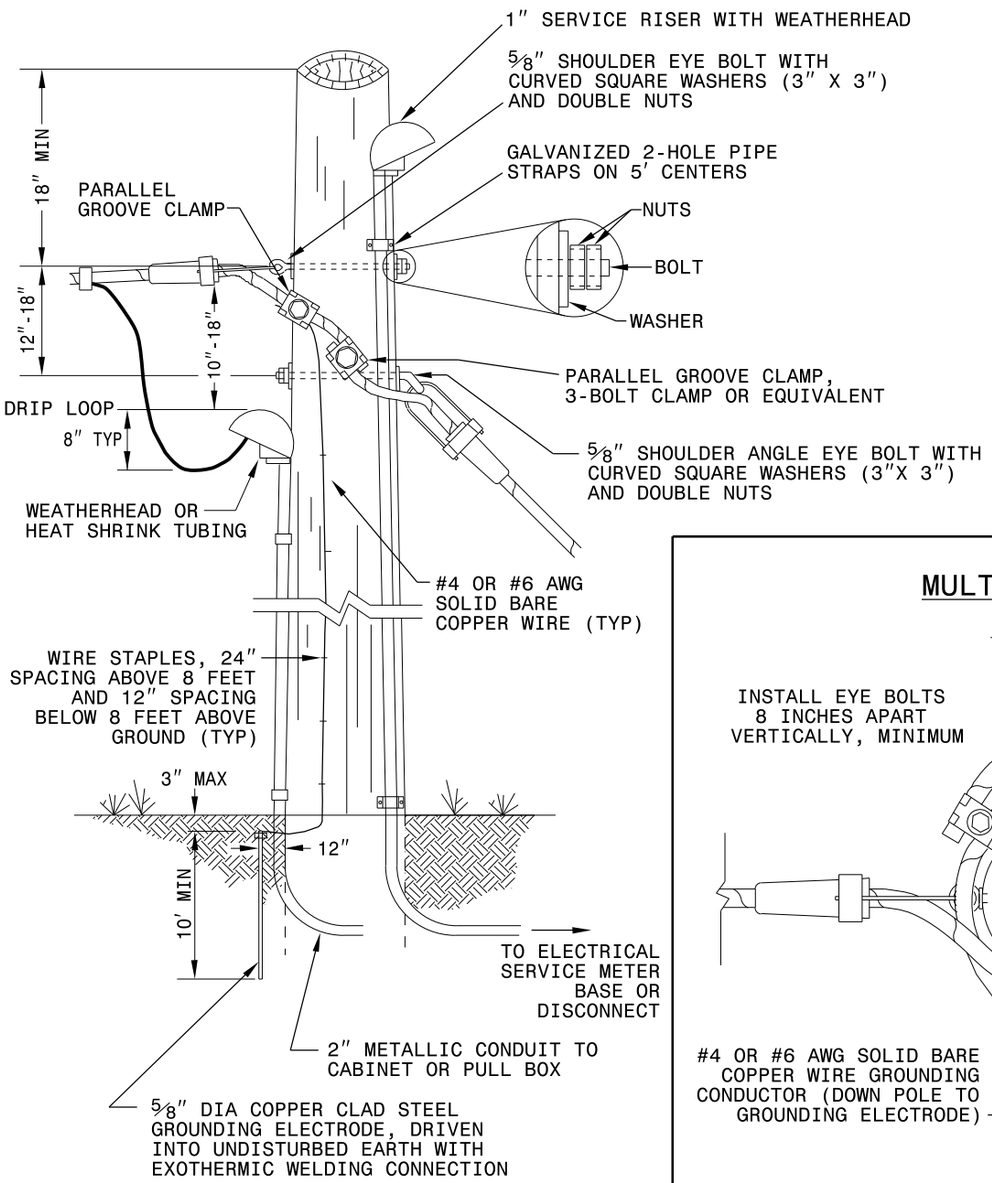

ONE-BOLT METHOD

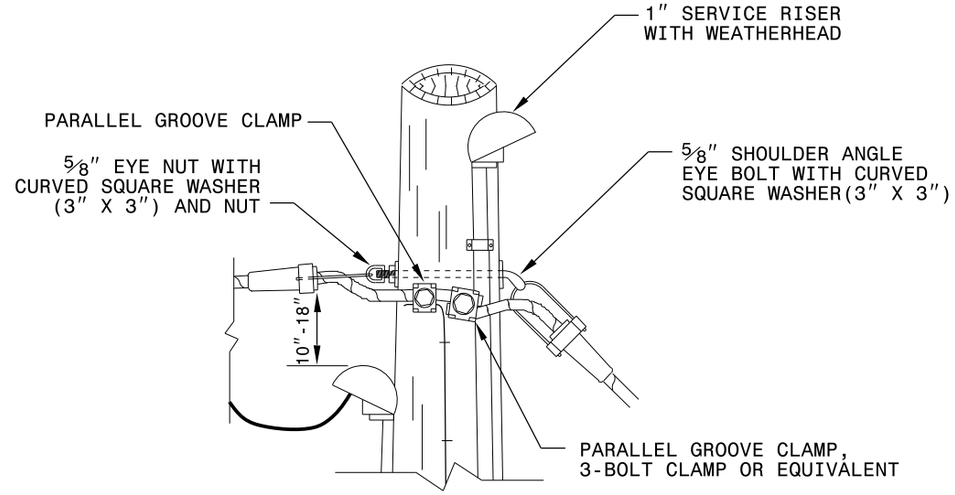

MULTIPLE SPANS

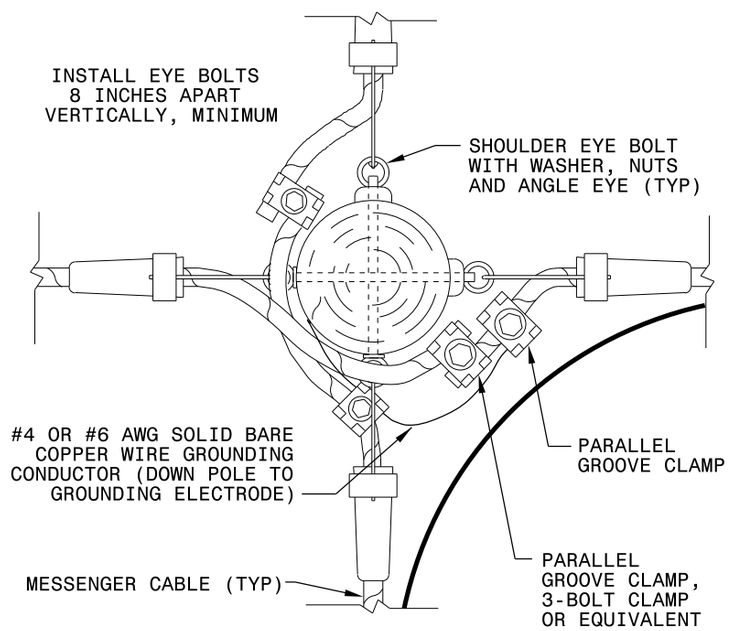

COMMUNICATIONS CABLE AT INTERMEDIATE POLE

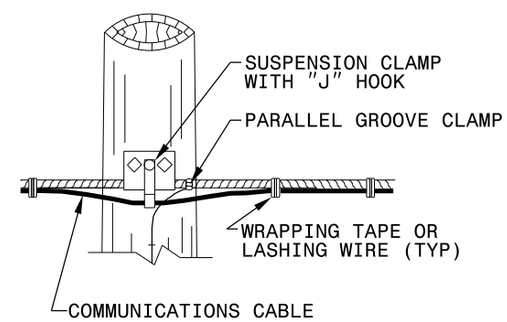

NOTE

FOR CONNECTING MESSENGER TO MESSENGER, USE PARALLEL GROOVE CLAMP, 3-BOLT CLAMP OR EQUIVALENT. FOR CONNECTING COPPER WIRE TO MESSENGER, USE PARALLEL GROOVE CLAMP.

STATE OF
NORTH CAROLINA
DEPT. OF TRANSPORTATION
DIVISION OF HIGHWAYS
RALEIGH, N.C.

1-12

ENGLISH STANDARD DRAWING FOR

WOOD POLES

METHODS OF ATTACHMENT AND GROUNDING

SHEET 1 OF 1
1720.01

STATE OF
NORTH CAROLINA
DEPT. OF TRANSPORTATION
DIVISION OF HIGHWAYS
RALEIGH, N.C.

1-12

ENGLISH STANDARD DRAWING FOR

GUY ASSEMBLIES

DIRECT DOWN GUY

SHEET 1 OF 3

1721.01

GENERAL NOTES

1. GUY EACH SPAN SEPARATELY.
2. USE EYE HARDWARE (EYE BOLTS, EYE NUTS, ANGLE EYES, EYES, TRIPLE-EYE BOLT ANCHOR RODS) WITH ROUNDED GROOVES IN THE EYES. PROVIDE A SEPARATE GROOVE FOR EACH CABLE TO BE TERMINATED.
3. SEE ROADWAY STANDARD DRAWING 1720 FOR METHODS OF ATTACHMENT AND GROUNDING.

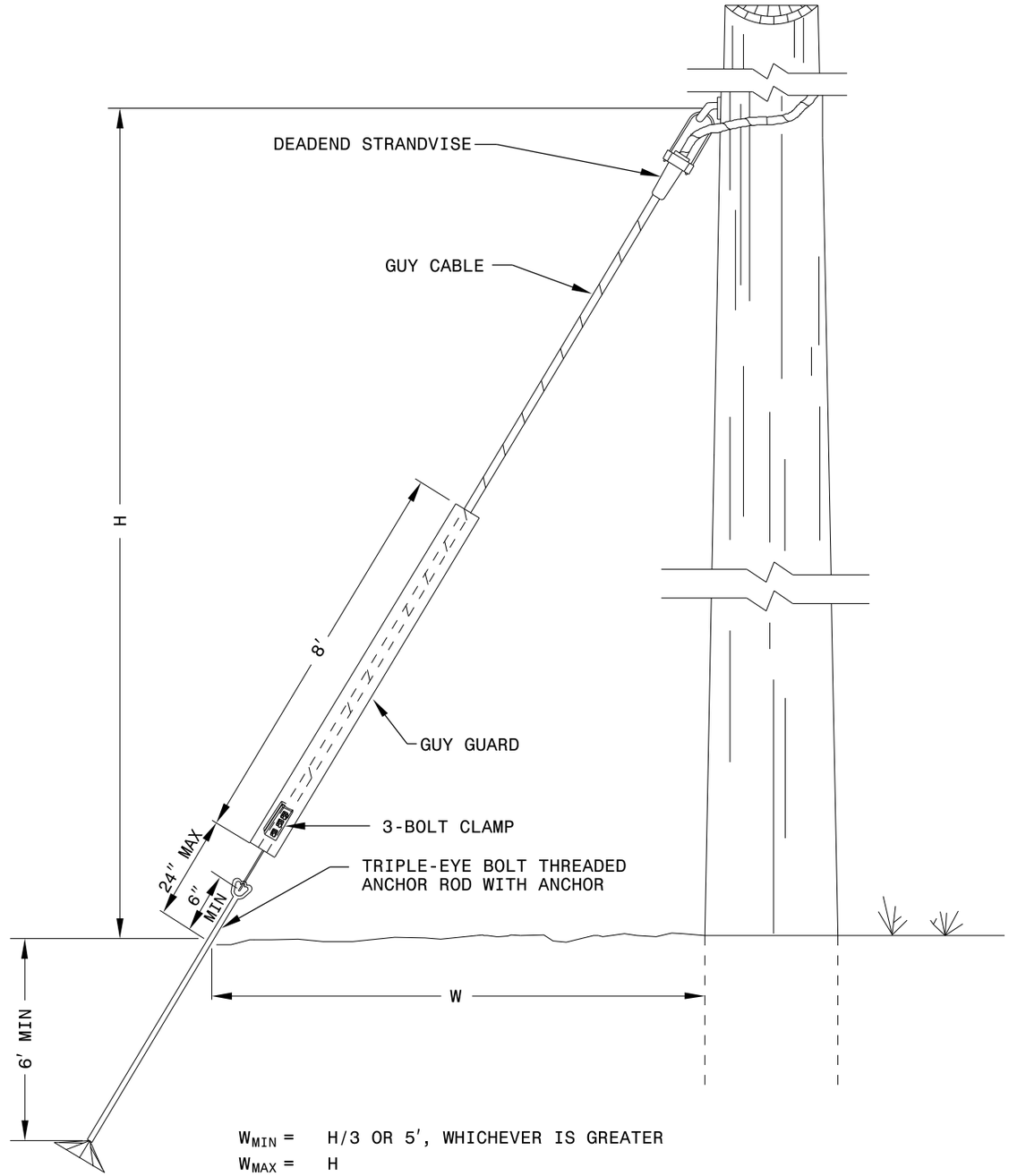

W_{MIN} = H/3 OR 5', WHICHEVER IS GREATER

W_{MAX} = H

STATE OF
NORTH CAROLINA
DEPT. OF TRANSPORTATION
DIVISION OF HIGHWAYS
RALEIGH, N.C.

1-12

ENGLISH STANDARD DRAWING FOR

GUY ASSEMBLIES

DIRECT DOWN GUY

SHEET 1 OF 3

1721.01

STATE OF
NORTH CAROLINA
DEPT. OF TRANSPORTATION
DIVISION OF HIGHWAYS
RALEIGH, N.C.

1-12

ENGLISH STANDARD DRAWING FOR

GUY ASSEMBLIES

SIDEWALK DOWN GUY

SHEET 2 OF 3

1721.01

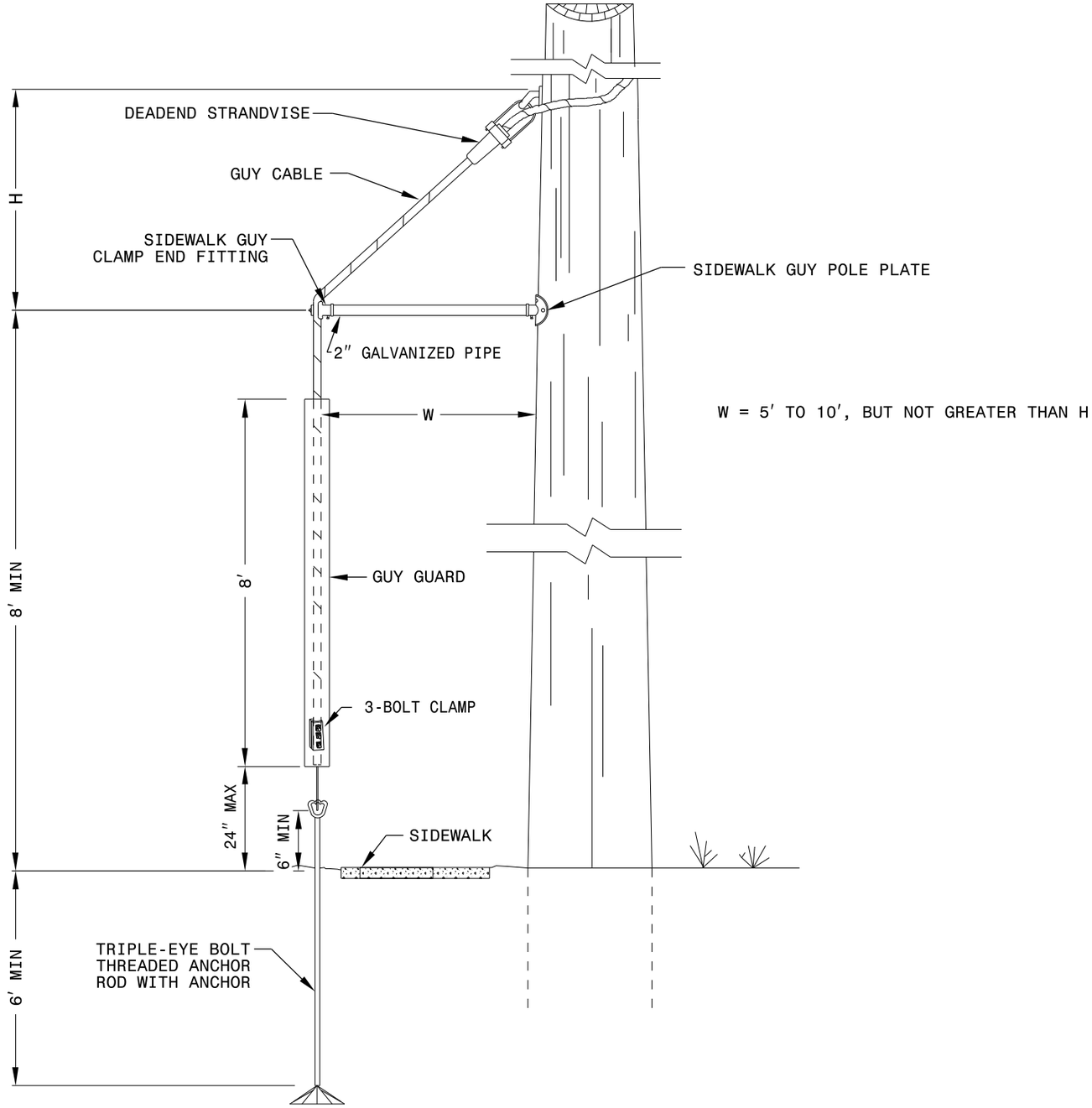

STATE OF
NORTH CAROLINA
DEPT. OF TRANSPORTATION
DIVISION OF HIGHWAYS
RALEIGH, N.C.

1-12

ENGLISH STANDARD DRAWING FOR

GUY ASSEMBLIES

SIDEWALK DOWN GUY

SHEET 2 OF 3

1721.01

STATE OF
NORTH CAROLINA
DEPT. OF TRANSPORTATION
DIVISION OF HIGHWAYS
RALEIGH, N.C.

1-12

ENGLISH STANDARD DRAWING FOR

GUY ASSEMBLIES

AERIAL (BACK) GUYS

SHEET 3 OF 3

1721.01

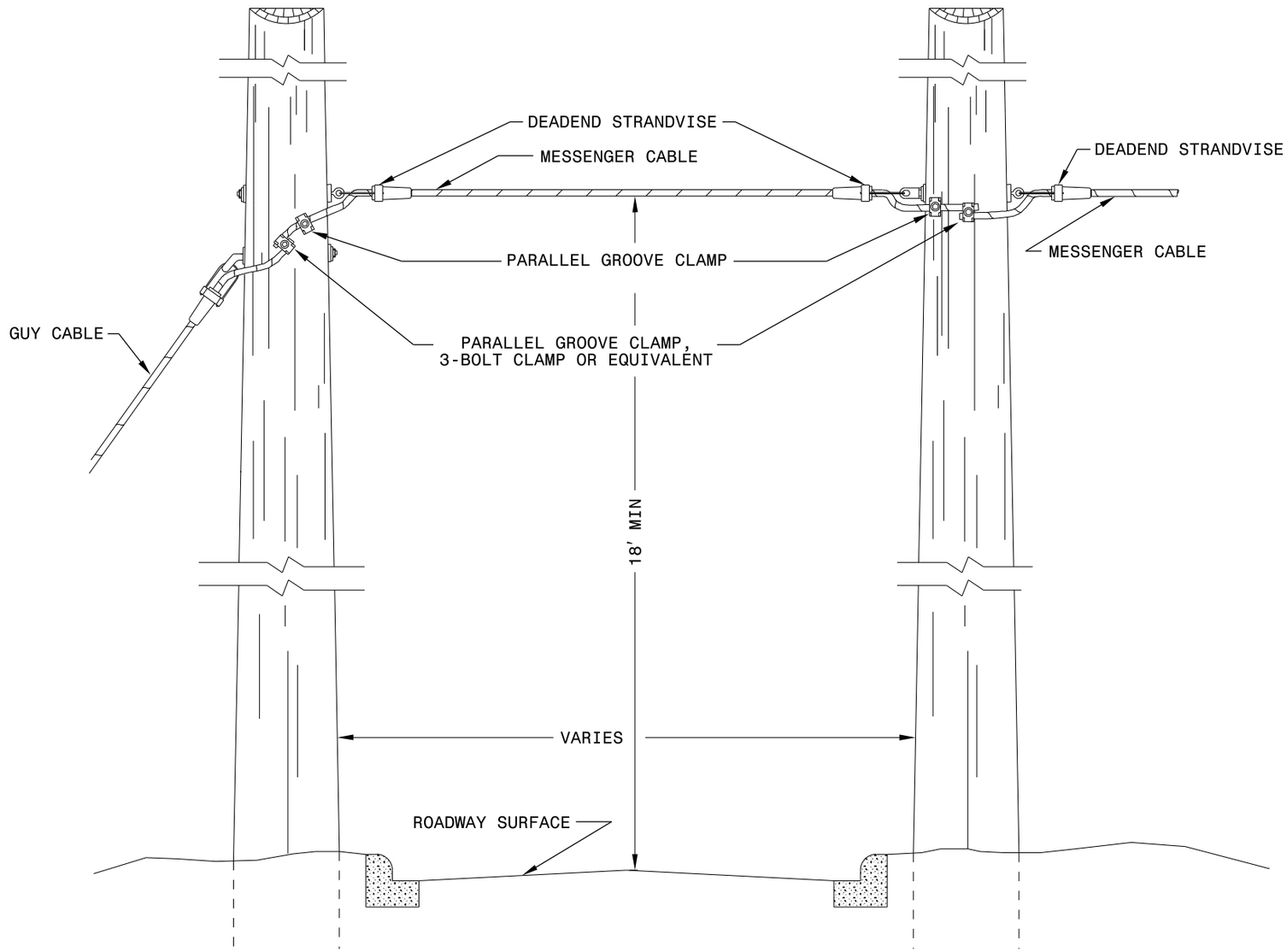

STATE OF
NORTH CAROLINA
DEPT. OF TRANSPORTATION
DIVISION OF HIGHWAYS
RALEIGH, N.C.

1-12

ENGLISH STANDARD DRAWING FOR

GUY ASSEMBLIES

AERIAL (BACK) GUYS

SHEET 3 OF 3

1721.01

STATE OF
NORTH CAROLINA
DEPT. OF TRANSPORTATION
DIVISION OF HIGHWAYS
RALEIGH, N.C.

1-12

ENGLISH DETAIL DRAWING FOR
INDUCTIVE DETECTION LOOPS

CONVENTIONAL 4-SIDED LOOP

SAW SLOT DEPTH CHART

DEPTH (IN)	NO. OF WIRE TURNS				
	2	3	4	5	6
CONCRETE	2.0	2.0	2.5	2.5	3.0
ASPHALT	2.0	2.5	3.0	3.0	3.0

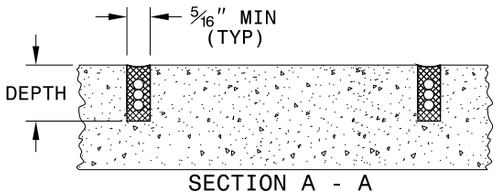

SAW CUT OPTIONS

OPTION 1

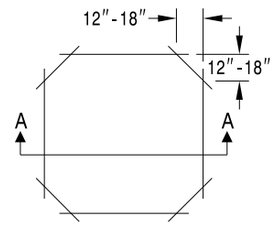

OPTION 2
(POOR PAVEMENT)

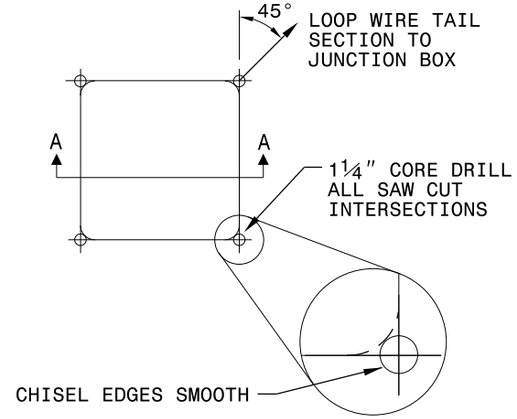

LOOP WINDING METHOD

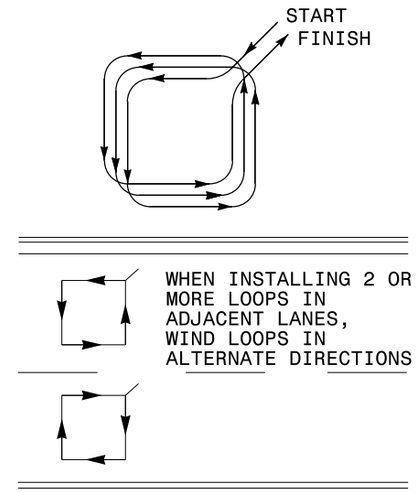

LOOP WIRE TWISTING METHOD

INCORRECT WAY TO TWIST WIRE

CORRECT WAY TO TWIST WIRE

NOTES

1. OVERLAP SAW CUTS AT CORNERS AND INTERSECTION POINTS TO ENSURE UNIFORM SAW SLOT DEPTH.
2. MAINTAIN 12" SPACING BETWEEN LOOP WIRE TAIL SECTIONS.
3. WIRE LOOPS CONNECTED TO THE SAME DETECTOR CHANNEL IN SERIES.
4. LOCATE LOOPS IN CENTER OF LANES UNLESS OTHERWISE SHOWN ON PLANS OR APPROVED BY ENGINEER.

QUADRUPOLE LOOP

SAW CUT OPTIONS

OPTION 1

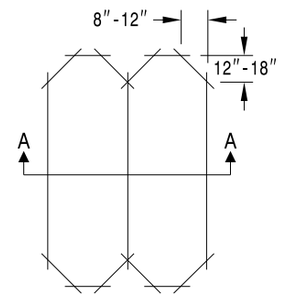

OPTION 2
(POOR PAVEMENT)

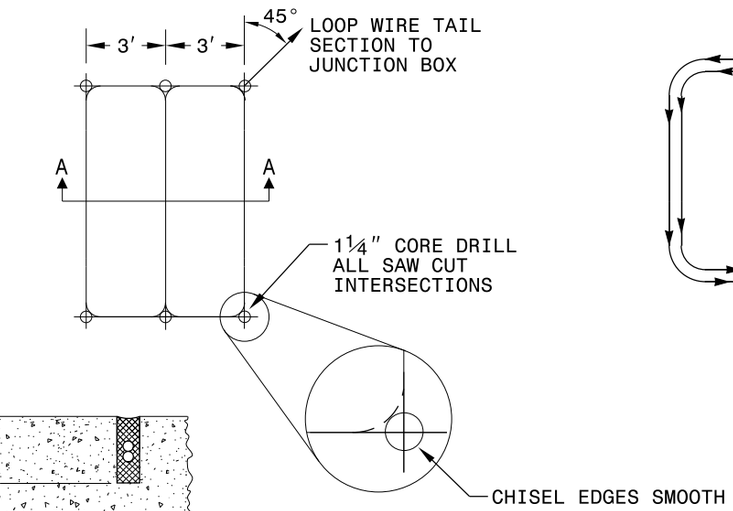

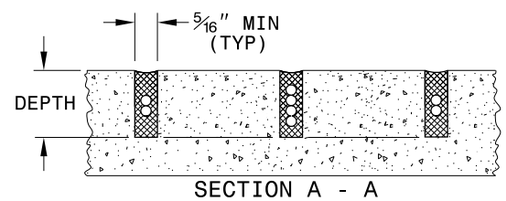

DEPTH IS 2.5" FOR CONCRETE AND 3.0" FOR ASPHALT

LOOP WINDING METHOD

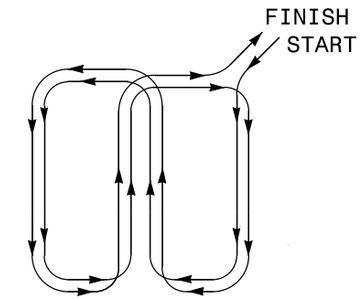

STATE OF
NORTH CAROLINA
DEPT. OF TRANSPORTATION
DIVISION OF HIGHWAYS
RALEIGH, N.C.

1-12

ENGLISH DETAIL DRAWING FOR
INDUCTIVE DETECTION LOOPS

SHEET 1 OF 3
1725.01

STATE OF
NORTH CAROLINA
DEPT. OF TRANSPORTATION
DIVISION OF HIGHWAYS
RALEIGH, N.C.

1-12

ENGLISH DETAIL DRAWING FOR
INDUCTIVE DETECTION LOOPS
LOOP WIRE DETAILS

SHEET 2 OF 3
1725.01

LOOP WIRE SPLICE POINT DETAILS

LOOP WIRE AT JUNCTION BOX

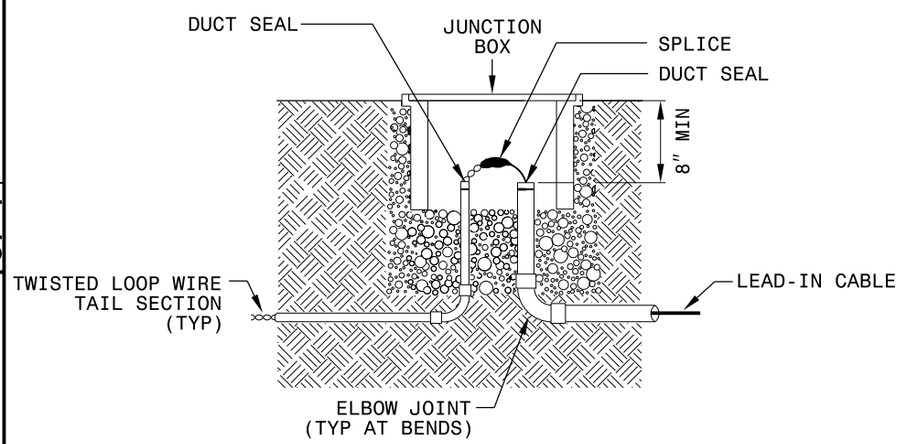

LOOP WIRE AT POLE

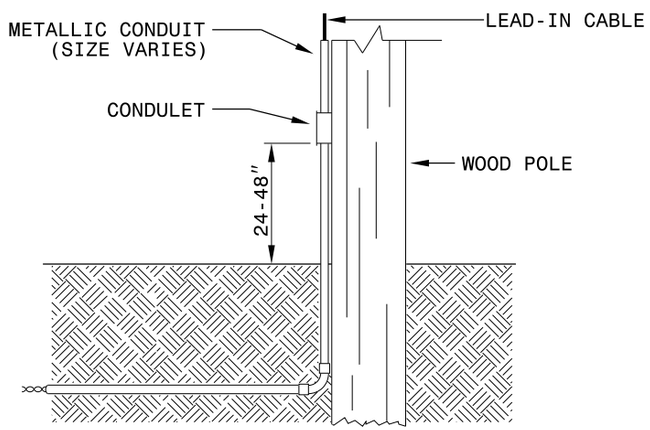

NOTE

SPLICE ALL LOOP WIRE TAIL SECTIONS/LEAD-IN CABLE IN JUNCTION BOXES OR APPROVED CONDULETS.

LOOP WIRE PAVEMENT EDGE DETAILS

LOOP WIRE AT CURB & GUTTER SECTION

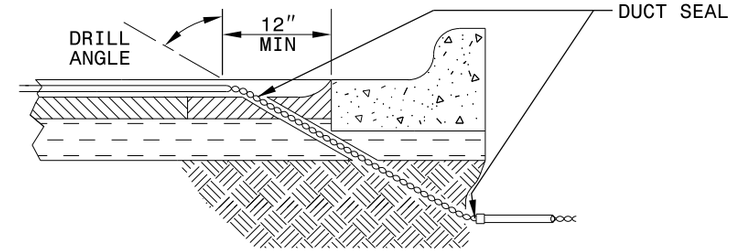

LOOP WIRE AT PAVEMENT SECTION

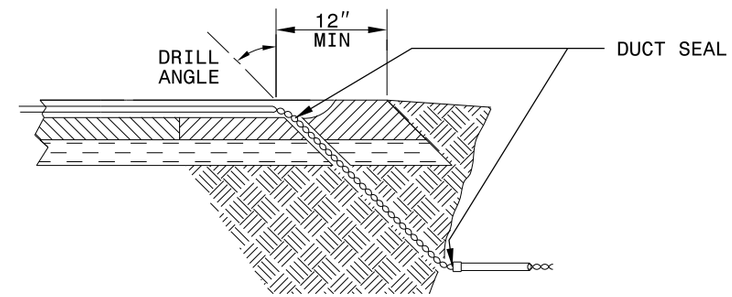

NOTES

1. DO NOT EXCAVATE UNDER CURB AND GUTTER SECTIONS FOR CONDUIT INSTALLATION.
2. TWIST LOOP WIRE TAIL SECTIONS FROM WHERE LOOP WIRE TAIL LEAVES SAW CUT TO JUNCTION BOX, INCLUDING THROUGH CONDUIT.
3. BEFORE SEALING LOOPS, INSTALL DUCT SEAL WHERE LOOP WIRE TAIL SECTION LEAVES SAW CUT IN PAVEMENT AND AT ENTRANCE OF CONDUIT TO JUNCTION BOX.

STATE OF
NORTH CAROLINA
DEPT. OF TRANSPORTATION
DIVISION OF HIGHWAYS
RALEIGH, N.C.

1-12

ENGLISH DETAIL DRAWING FOR
INDUCTIVE DETECTION LOOPS
LOOP WIRE DETAILS

SHEET 2 OF 3
1725.01

STATE OF
NORTH CAROLINA
DEPT. OF TRANSPORTATION
DIVISION OF HIGHWAYS
RALEIGH, N.C.

1-12

ENGLISH DETAIL DRAWING FOR

INDUCTIVE DETECTION LOOPS

SPLICING FOR LEAD-IN CABLE AND LOOP WIRE

SHEET 3 OF 3

1725.01

STEP 1. STRIP LOOP WIRE AND LEAD-IN CABLE

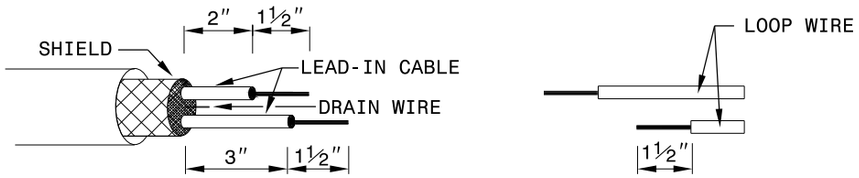

STEP 2. CONNECT AND SOLDER

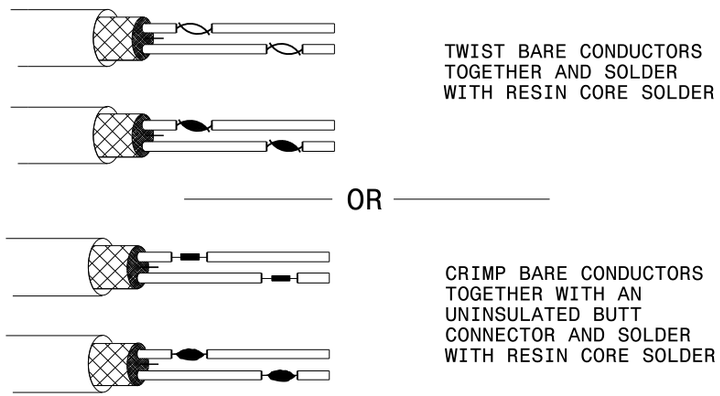

BOND SHIELD DRAIN WIRE AT SPLICE SECTIONS (DO NOT GROUND)

LOOP WIRE AND LEAD-IN CABLE CONNECTION DETAILS

SINGLE CONNECTION SERIES CONNECTION

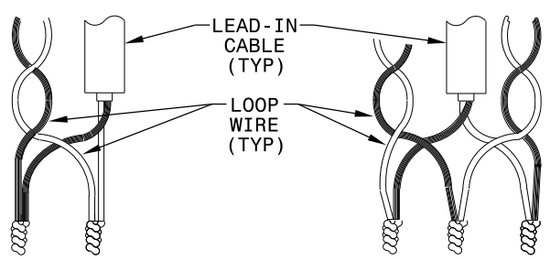

STEP 3. INSULATE EACH SOLDER JOINT SEPARATELY

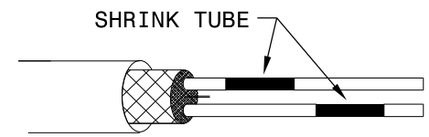

STEP 4. ENVIRONMENTALLY PROTECT SPLICE

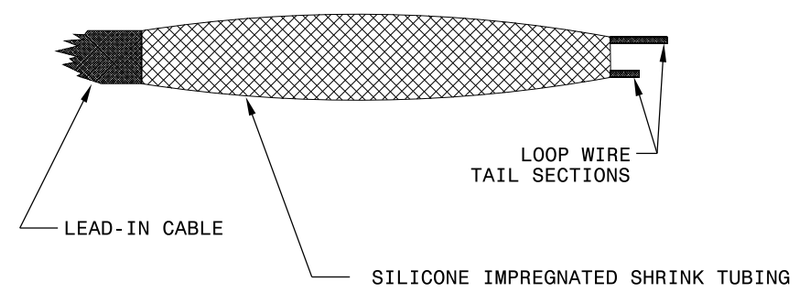

STATE OF
NORTH CAROLINA
DEPT. OF TRANSPORTATION
DIVISION OF HIGHWAYS
RALEIGH, N.C.

1-12

ENGLISH DETAIL DRAWING FOR

INDUCTIVE DETECTION LOOPS

SPLICING FOR LEAD-IN CABLE AND LOOP WIRE

SHEET 3 OF 3

1725.01

STATE OF
NORTH CAROLINA
DEPT. OF TRANSPORTATION
DIVISION OF HIGHWAYS
RALEIGH, N.C.

1-12

ENGLISH STANDARD DRAWING FOR

FIBER-OPTIC CABLE

SPARE CABLE STORAGE

SHEET 1 OF 1

1730.01

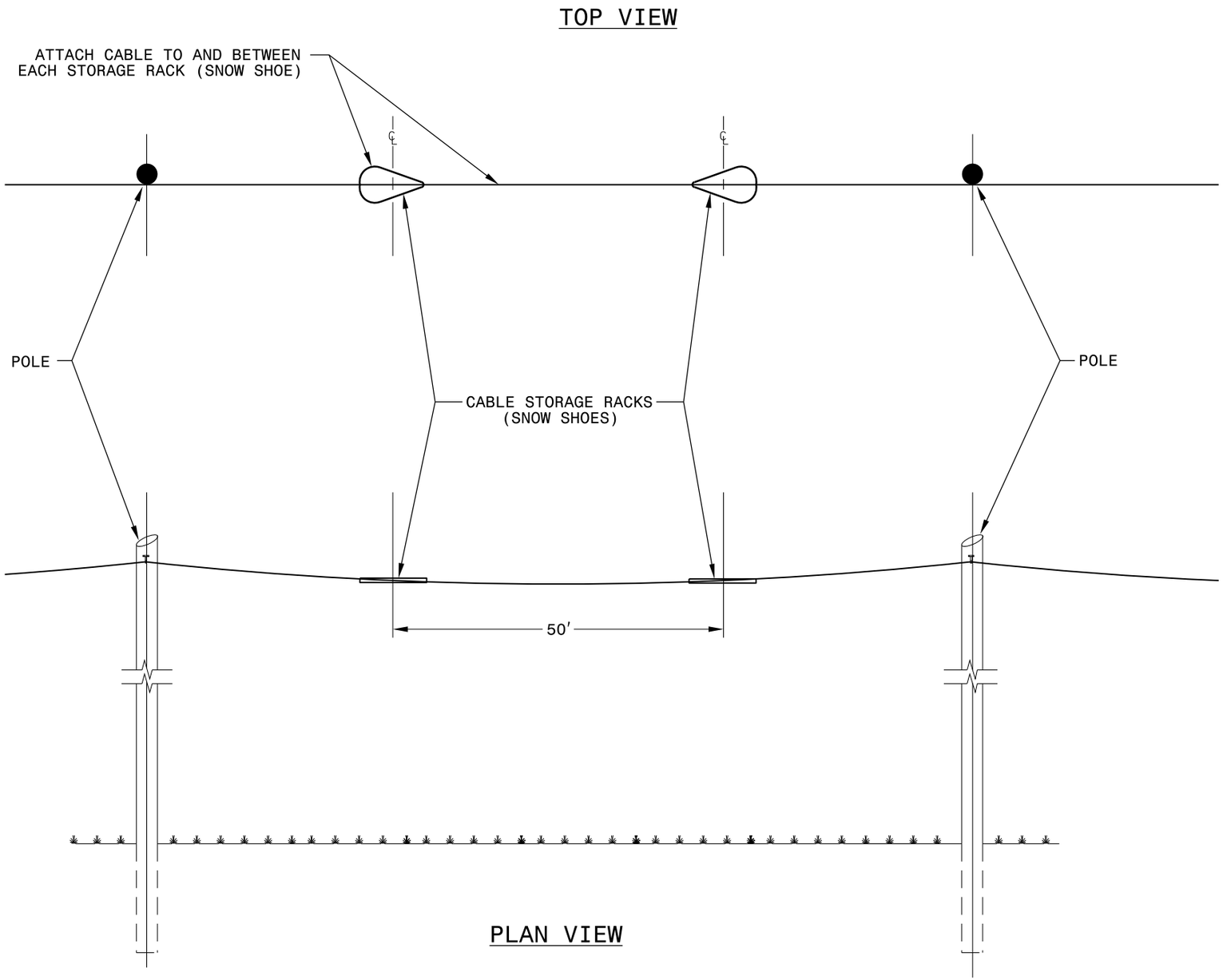

STATE OF
NORTH CAROLINA
DEPT. OF TRANSPORTATION
DIVISION OF HIGHWAYS
RALEIGH, N.C.

1-12

ENGLISH STANDARD DRAWING FOR

FIBER-OPTIC CABLE

SPARE CABLE STORAGE

SHEET 1 OF 1

1730.01

STATE OF
NORTH CAROLINA
DEPT. OF TRANSPORTATION
DIVISION OF HIGHWAYS
RALEIGH, N.C.

1-12

ENGLISH STANDARD DRAWING FOR

PEDESTALS

PEDESTRIAN PUSHBUTTON (TYPE I)

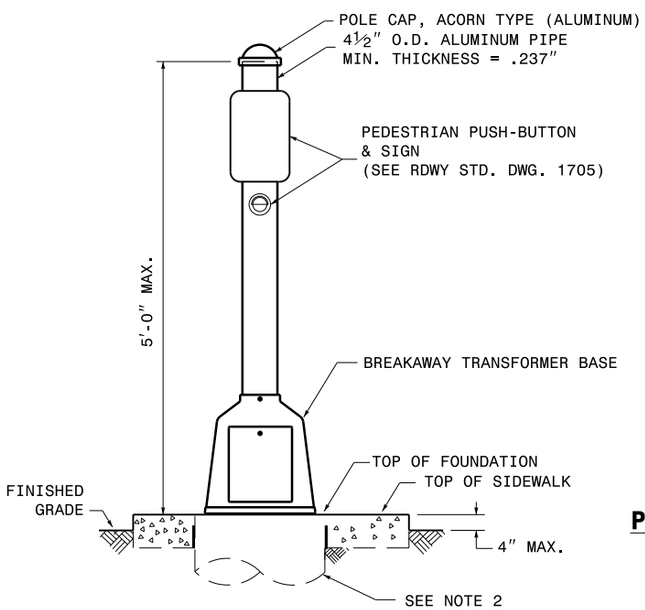

PUSHBUTTON PEDESTAL ON BREAKAWAY TRANSFORMER BASE

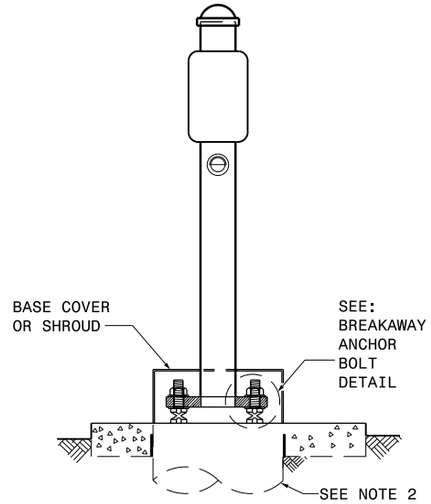

PUSHBUTTON PEDESTAL ON FLANGE BASE WITH BREAKAWAY ANCHOR BOLTS

NOTES:

1. CONSTRUCT PEDESTALS ON FHWA APPROVED BREAKAWAY BASES OR ANCHORS.
2. CONSTRUCT PEDESTAL FOUNDATIONS IN ACCORDANCE WITH STANDARD DRAWING 1743.04.
3. PUSHBUTTON PEDESTALS ARE DESIGNED FOR USE IN ALL WIND ZONE REGIONS. PEDESTAL BASE REACTIONS USING 4½" OD SCHEDULE 40 ALUMINUM PIPE ARE:
   AXIAL LOAD: 60 LBS
   SHEAR LOAD: 120 LBS
   MOMENT LOAD: 435 FT-LBS
4. BASE REACTIONS ARE BASED ON A DESIGN LOADING FOR 2 PUSHBUTTONS AND 2 PEDESTRIAN SIGNS. DO NOT EXCEED THE DESIGN LOADING WITHOUT APPROVAL.
5. ALL ELECTRICAL CONDUCTORS INSIDE OF BREAKAWAY SUPPORTS SHOULD SHEAR OR BECOME DISCONNECTED AS CLOSE TO THE FOUNDATION BASE AS POSSIBLE DURING A KNOCKDOWN. REFER TO ELECTRICAL CONDUCTOR SHEAR DEVICE DETAIL.

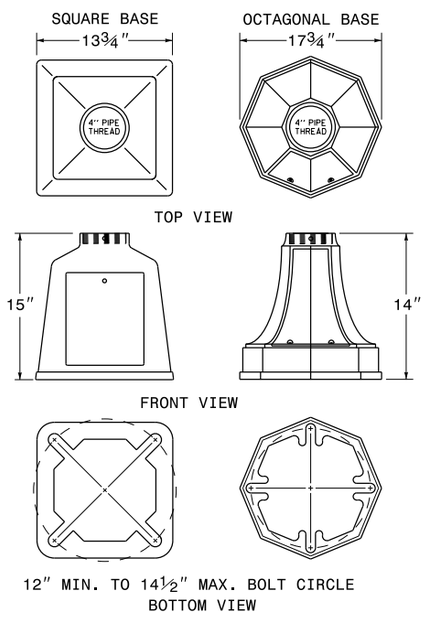

NORMAL DUTY TRANSFORMER BASE STYLES

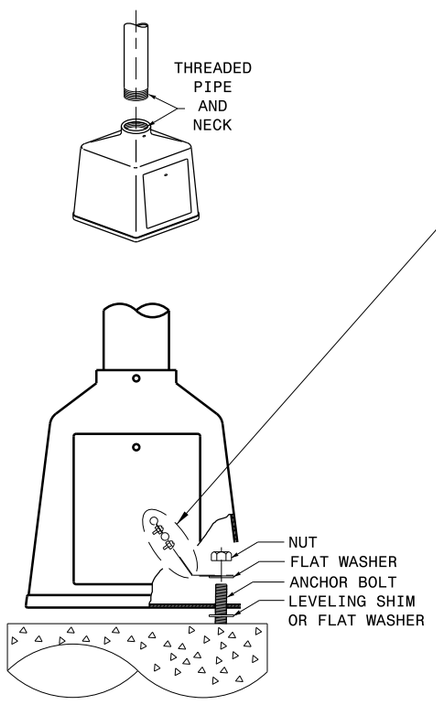

TRANSFORMER BASE ANCHORING DETAIL

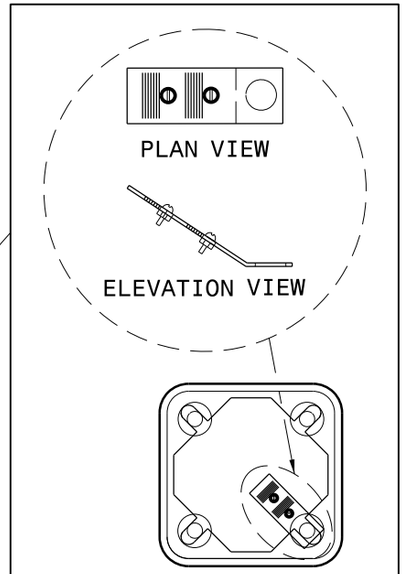

ELECTRICAL CONDUCTOR SHEAR DEVICE DETAIL

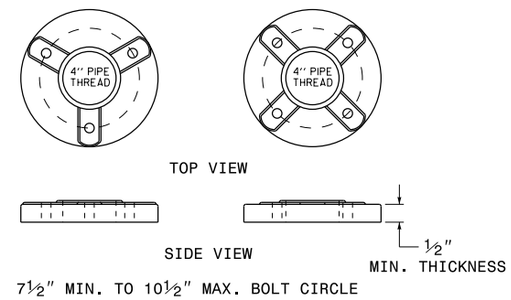

THREADED FLANGE BASE STYLES

TO BE USED WITH BREAKAWAY ANCHORS ONLY

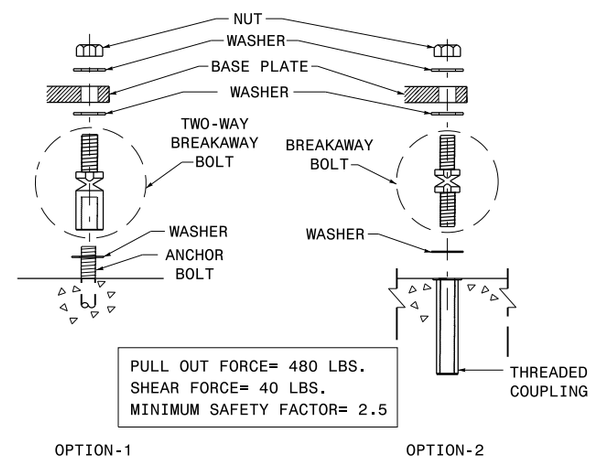

BREAKAWAY ANCHOR BOLT DETAIL

TO BE USED WITH THREADED FLANGE BASES ONLY

SHEET 1 OF 1

1743.01

STATE OF
NORTH CAROLINA
DEPT. OF TRANSPORTATION
DIVISION OF HIGHWAYS
RALEIGH, N.C.

1-12

ENGLISH STANDARD DRAWING FOR

PEDESTALS

PEDESTRIAN PUSHBUTTON (TYPE I)

SHEET 1 OF 1

1743.01

STATE OF
NORTH CAROLINA
DEPT. OF TRANSPORTATION
DIVISION OF HIGHWAYS
RALEIGH, N.C.

1-12

ENGLISH STANDARD DRAWING FOR

PEDESTALS

NORMAL DUTY (TYPE II)

SHEET 1 OF 1

1743.02

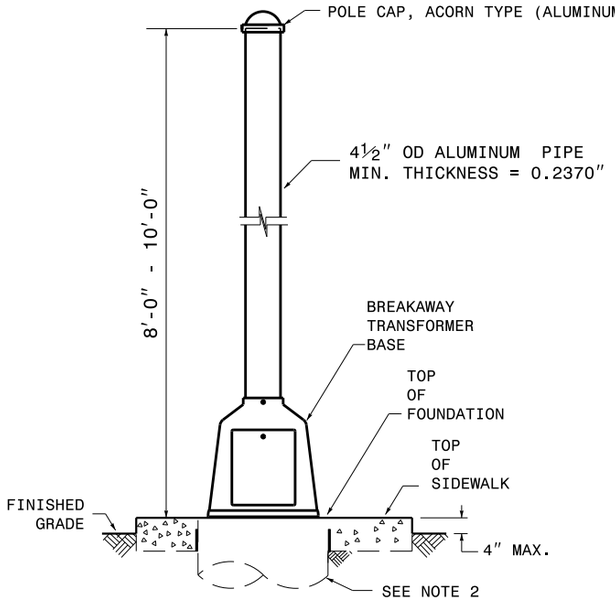

NORMAL DUTY PEDESTAL ON BREAKAWAY TRANSFORMER BASE

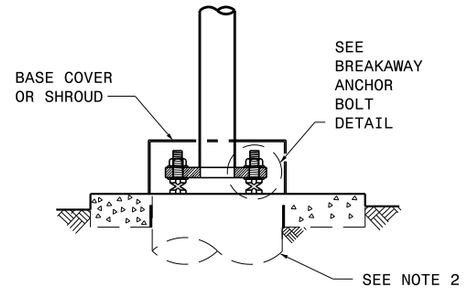

NORMAL DUTY PEDESTAL ON FLANGE BASE WITH BREAKAWAY ANCHOR BOLTS

NOTES:

1. CONSTRUCT PEDESTALS ON FHWA APPROVED BREAKAWAY BASES OR ANCHORS.
2. CONSTRUCT PEDESTAL FOUNDATIONS IN ACCORDANCE WITH STANDARD DRAWING 1743.04.
3. NORMAL DUTY PEDESTALS ARE DESIGNED FOR USE IN ALL WIND ZONE REGIONS. PEDESTAL BASE REACTIONS USING 4½" OD SCHEDULE 40 ALUMINUM PIPE ARE:
   AXIAL LOAD: 270 LBS
   SHEAR LOAD: 370 LBS
   MOMENT LOAD: 2,580 FT-LBS
4. BASE REACTIONS ARE BASED ON A DESIGN LOADING FOR 2 - 3 SECTION SIGNAL HEADS, 2 - PEDESTRIAN SIGNALS, 2 PUSHBUTTONS AND 2 PEDESTRIAN SIGNS. DO NOT EXCEED DESIGN LOADING WITHOUT APPROVAL.
5. ALL ELECTRICAL CONDUCTORS INSIDE OF BREAKAWAY SUPPORTS SHOULD SHEAR OR BECOME DISCONNECTED AS CLOSE TO THE FOUNDATION BASE AS POSSIBLE DURING A KNOCKDOWN. REFER TO ELECTRICAL CONDUCTOR SHEAR DEVICE DETAIL.

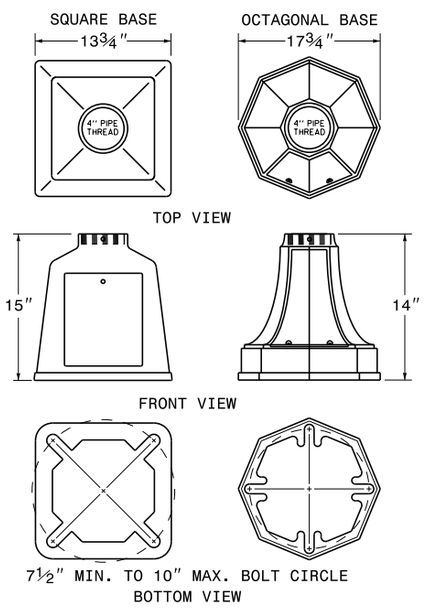

NORMAL DUTY TRANSFORMER BASE STYLES

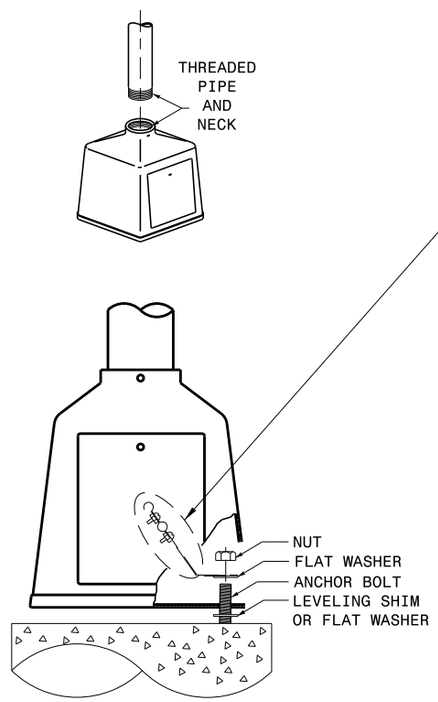

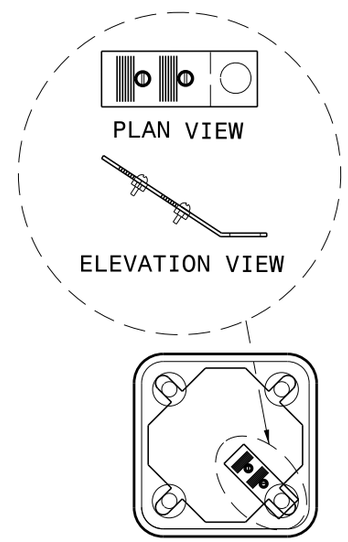

ELECTRICAL CONDUCTOR SHEAR DEVICE DETAIL

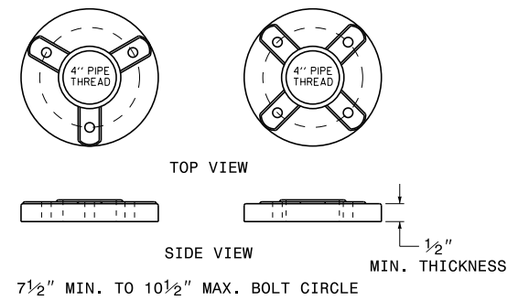

THREADED FLANGE BASE STYLES

TO BE USED WITH BREAKAWAY ANCHORS ONLY

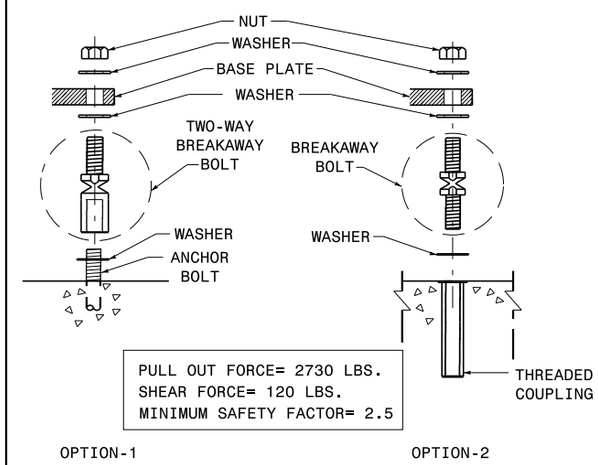

BREAKAWAY ANCHOR BOLT DETAIL

TO BE USED WITH THREADED FLANGE BASES ONLY

STATE OF
NORTH CAROLINA
DEPT. OF TRANSPORTATION
DIVISION OF HIGHWAYS
RALEIGH, N.C.

1-12

ENGLISH STANDARD DRAWING FOR

PEDESTALS

NORMAL DUTY (TYPE II)

SHEET 1 OF 1

1743.02

STATE OF
NORTH CAROLINA
DEPT. OF TRANSPORTATION
DIVISION OF HIGHWAYS
RALEIGH, N.C.

1-12

ENGLISH STANDARD DRAWING FOR

PEDESTALS

HEAVY DUTY (TYPE III)

SHEET 1 OF 1

1743.03

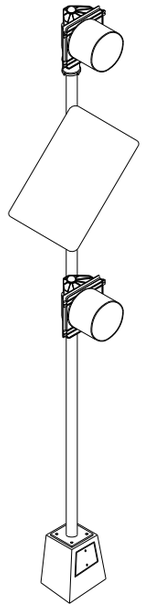

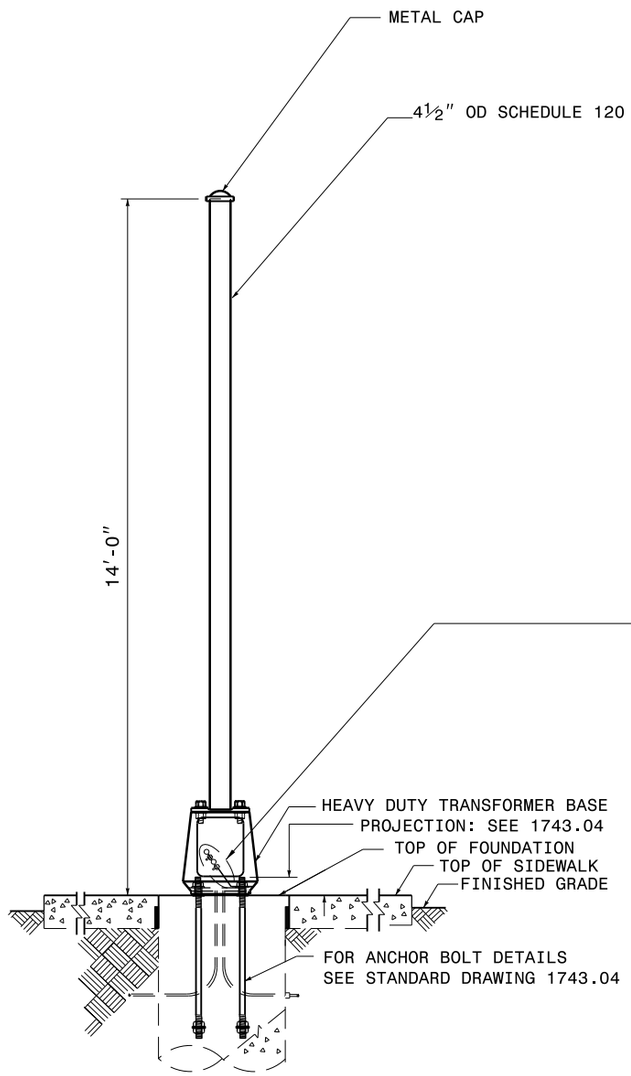

TRANSFORMER BASE

NOTES:

1. CONSTRUCT PEDESTALS ON FHWA APPROVED BREAKAWAY BASES OR ANCHORS.
2. CONSTRUCT PEDESTAL FOUNDATIONS IN ACCORDANCE WITH STANDARD DRAWING 1743.04.
3. PUSHBUTTON PEDESTALS ARE DESIGNED FOR USE IN ALL WIND ZONE REGIONS.
   PEDESTAL BASE REACTIONS USING 4½″ OD SCHEDULE 120 GALVANIZED STEEL PIPE ARE:
   AXIAL LOAD: 600 LBS
   SHEAR LOAD: 1,500 LBS
   MOMENT LOAD: 14,500 FT-LBS
4. BASE REACTIONS ARE BASED ON A DESIGN LOADING FOR 2 - 12″ SIGNALS AND A 48″ X 48″ SIGN. DO NOT EXCEED DESIGN LOADING WITHOUT APPROVAL.
5. ALL ELECTRICAL CONDUCTORS INSIDE OF BREAKAWAY SUPPORTS SHOULD SHEAR OR BECOME DISCONNECTED AS CLOSE TO THE FOUNDATION BASE AS POSSIBLE DURING A KNOCKDOWN. REFER TO ELECTRICAL CONDUCTOR SHEAR DEVICE DETAIL.
6. DO NOT USE BREAKAWAY ANCHOR BOLTS WITH THIS TYPE OF PEDESTAL.

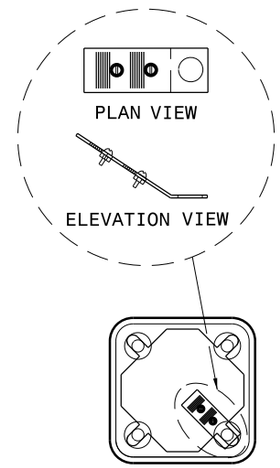

ELECTRICAL CONDUCTOR SHEAR DEVICE DETAIL

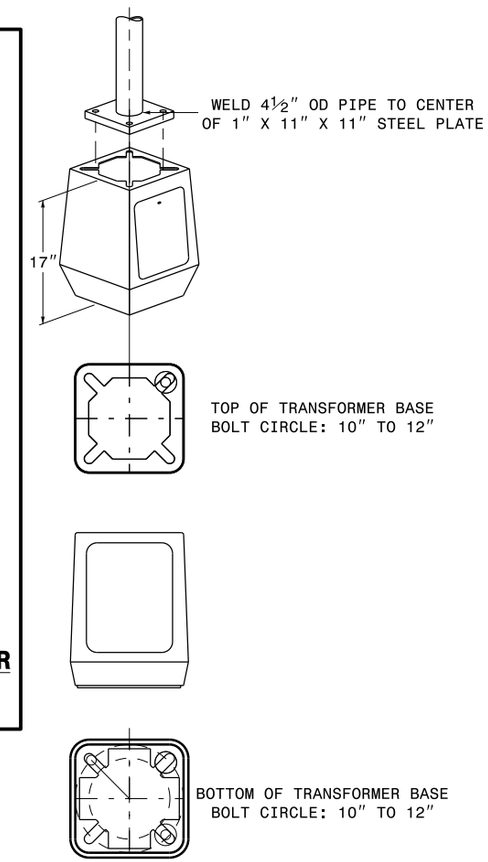

STATE OF
NORTH CAROLINA
DEPT. OF TRANSPORTATION
DIVISION OF HIGHWAYS
RALEIGH, N.C.

1-12

ENGLISH STANDARD DRAWING FOR

PEDESTALS

HEAVY DUTY (TYPE III)

SHEET 1 OF 1

1743.03

STATE OF NORTH CAROLINA
DEPT. OF TRANSPORTATION
DIVISION OF HIGHWAYS
RALEIGH, N.C.

1-12

ENGLISH STANDARD DRAWING FOR

PEDESTALS

FOUNDATIONS

SHEET 1 OF 1

1743.04

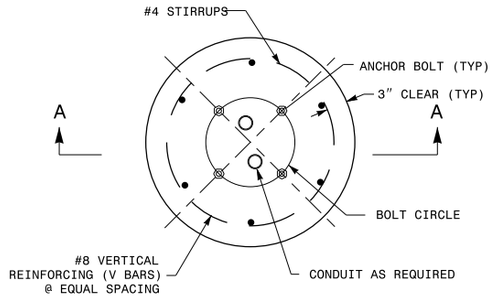

PEDESTAL FOUNDATION - PLAN VIEW

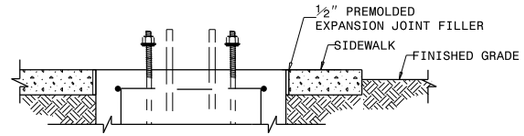

PEDESTAL FOUNDATION DETAILS FOR SIDEWALK

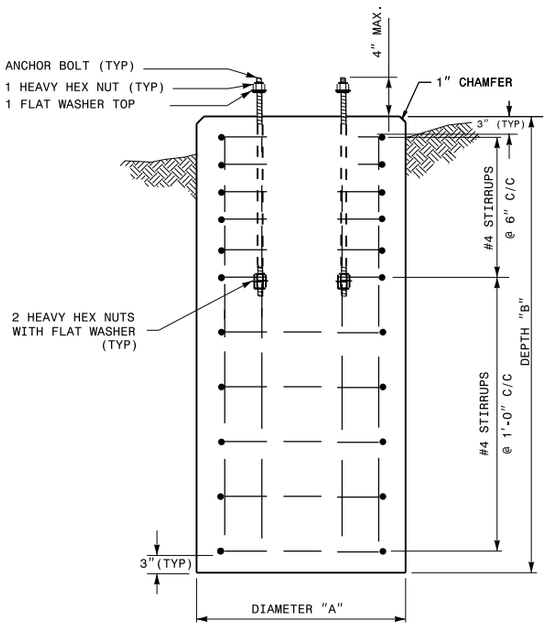

TYPES I, II & III

SECTION A-A

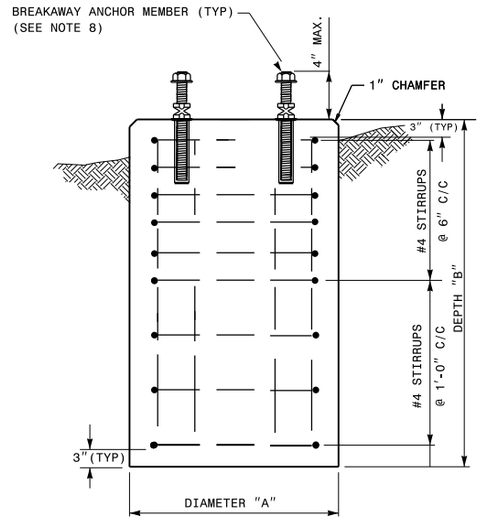

TYPES I & II ONLY

SECTION A-A

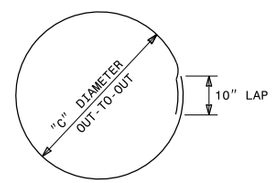

CLOSED HOOPS

NOTES:

1. CAST FOUNDATION AGAINST UNDISTURBED SOIL WHEREVER CONDITIONS PERMIT. IN UNSTABLE SOIL, CAST-IN-PLACE TUBE FORMS ARE ALLOWED WITH APPROVAL.
2. COMPLY WITH APPLICABLE PROVISIONS OF SECTION 825 FOR CONCRETE CONSTRUCTION.
3. USE CLASS "A" CONCRETE THAT MEETS THE REQUIREMENTS OF SECTION 1000 WITH A COMPRESSION STRENGTH AT 28 DAYS OF F'c= 3000 PSI (MIN.).
4. USE ASTM GRADE 60 DEFORMED BARS FOR ALL REINFORCING STEEL.
5. GRADE IS ASSUMED TO BE (8H:1V) OR FLATTER. FOUNDATION SIZE AND DEPTHS ARE BASED ON THE FOLLOWING SOIL DESIGN PARAMETERS:
   A. SANDY TYPE SOIL
   B. NO GROUND WATER WITHIN 5'-0" OF SURFACE ELEVATION
   C. WIND SPEED NOT TO EXCEED 140 MPH

   IF ACTUAL CONDITIONS VARY SUBSTANTIALLY FROM THOSE ASSUMED, THE FOUNDATION DEPTH MAY BE ADJUSTED. IN THIS CASE, CONTACT THE ENGINEER.
6. MAINTAIN AT LEAST 3" COVER ON ALL REINFORCEMENT.
7. ORIENT CONDUIT AS REQUIRED BY THE DESIGN OR AS DICTATED BY FIELD CONDITIONS.
8. USE ADHESIVE ANCHOR FOR THREADED COUPLING INSERT. FOR TYPE I MINIMUM DEPTH NECESSARY IS 0'-4½" AND FOR TYPE II MINIMUM DEPTH NECESSARY IS 0'-6⅝". FOLLOW MANUFACTURER'S INSTALLATION INSTRUCTIONS.

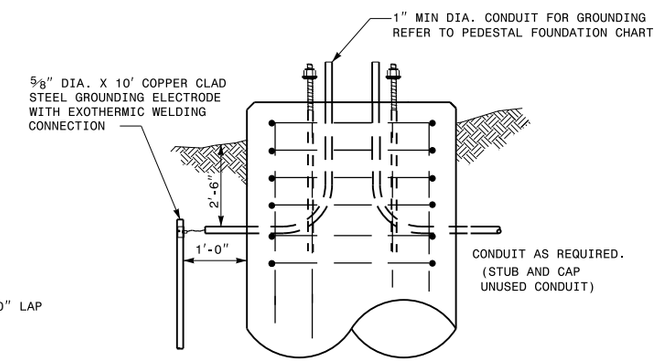

GROUNDING & CONDUIT DETAIL

PEDESTAL FOUNDATION TYPE AND SIZE

TYPE	PEDESTAL DESCRIPTION	SIZE			ANCHOR BOLT		INSTALL GROUNDING SYSTEM (YES/NO)
		DIAMETER "A" FT	DEPTH "B" FT	CONCRETE VOLUME CY	DIAMETER (MIN.) IN	LENGTH FT-IN	
I	PEDESTRIAN PUSHBUTTON	2'-0"	3'-6"	.41	½	1'-6"	NO
II	NORMAL-DUTY	2'-0"	5'-0"	.58	¾	2'-0"	YES
III	HEAVY-DUTY	2'-6"	7'-0"	1.27	1	4'-0"	YES

REINFORCING STEEL SCHEDULE

TYPE	V-BAR				STIRRUP								TOTAL STEEL WEIGHT LBS
	SIZE #	QTY	LENGTH	WEIGHT LBS	SIZE #	QUANTITY VERTICAL SPACING ON 6" CENTERS	QUANTITY VERTICAL SPACING ON 12" CENTERS	QUANTITY TOTAL	LENGTH	DIAMETER "C" FT	OVERLAP MIN.	WEIGHT LBS	
I	8	6	3'-0"	56	4	0	4	4	5'-7"	1'-6"	0'-10"	15	71
II	8	6	4'-6"	86	4	5	3	8	5'-7"	1'-6"	0'-10"	30	116
III	8	6	6'-6"	122	4	7	4	11	7'-2"	2'-0"	0'-10"	53	175

STATE OF NORTH CAROLINA
DEPT. OF TRANSPORTATION
DIVISION OF HIGHWAYS
RALEIGH, N.C.

1-12

ENGLISH STANDARD DRAWING FOR

PEDESTALS

FOUNDATIONS

SHEET 1 OF 1

1743.04

STATE OF
NORTH CAROLINA
DEPT. OF TRANSPORTATION
DIVISION OF HIGHWAYS
RALEIGH, N.C.

1-12

ENGLISH STANDARD DRAWING FOR

CONTROLLER AND CABINETS

CABINET COMPONET LAYOUT (BASEMOUNT)

170 CABINET MODEL 332 WITH 2070L CONTROLLER

SHEET 1 OF 2

1751.01

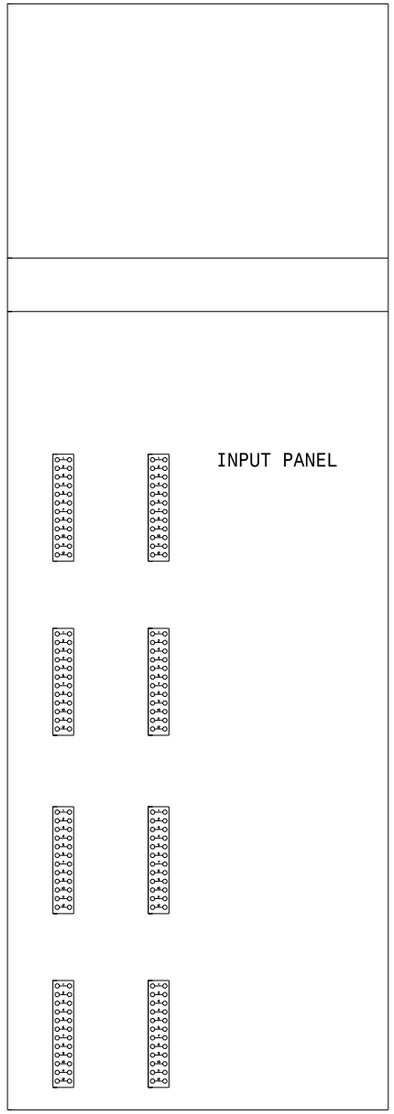

332 CABINET
LEFT SIDE
REAR VIEW

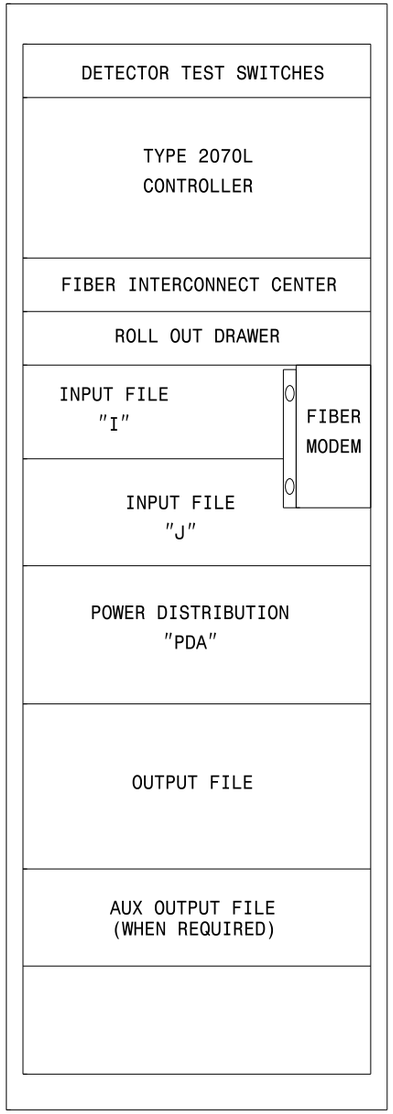

332 CABINET
REAR VIEW

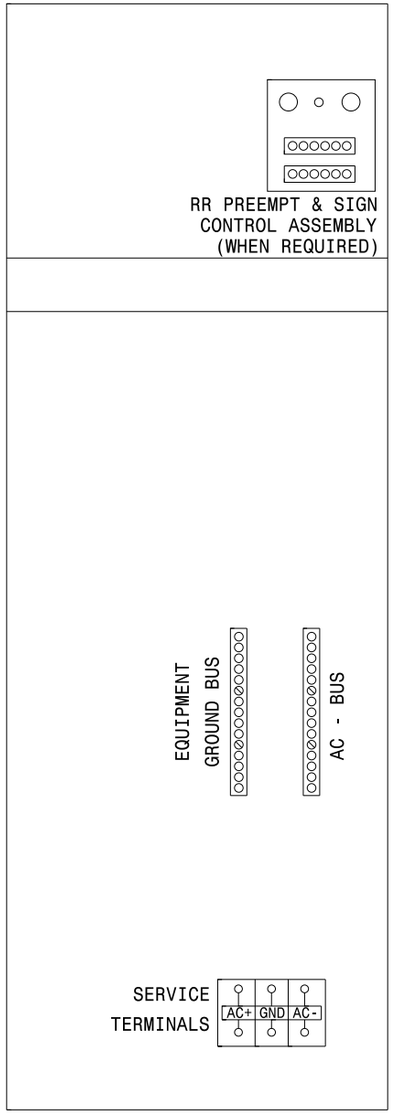

332 CABINET
RIGHT SIDE
REAR VIEW

NOTE

PROVIDE 2" SPACE BETWEEN CONTROLLER AND ROLL OUT DRAWER TO ACCOMMODATE FIBER INTERCONNECT CENTER.

STATE OF
NORTH CAROLINA
DEPT. OF TRANSPORTATION
DIVISION OF HIGHWAYS
RALEIGH, N.C.

1-12

ENGLISH STANDARD DRAWING FOR

CONTROLLERS AND CABINETS

CABINET COMPONENT LAYOUT (BASEMOUNT)

170 CABINET MODEL 332 WITH 2070L CONTROLLER

SHEET 1 OF 2

1751.01

STATE OF
NORTH CAROLINA
DEPT. OF TRANSPORTATION
DIVISION OF HIGHWAYS
RALEIGH, N.C.

1-12

ENGLISH STANDARD DRAWING FOR

CONTROLLER AND CABINETS

CABINET COMPONENT LAYOUT (POLE MOUNT)

170 CABINET MODEL 336S WITH 2070L CONTROLLER

SHEET 2 OF 2

1751.01

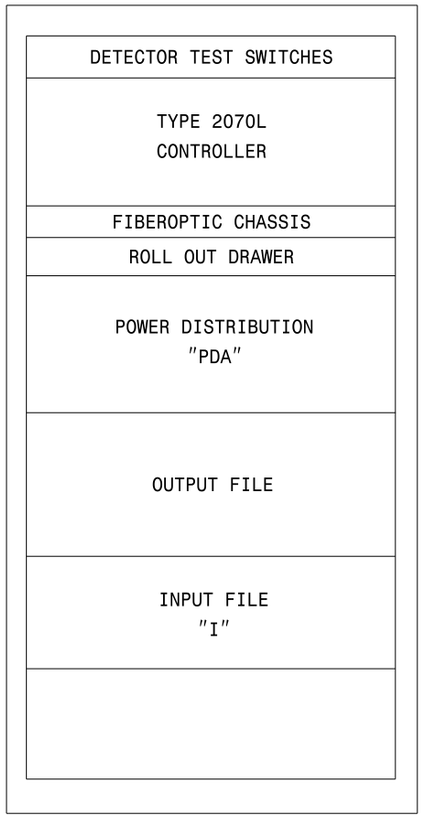

336S CABINET
FRONT VIEW

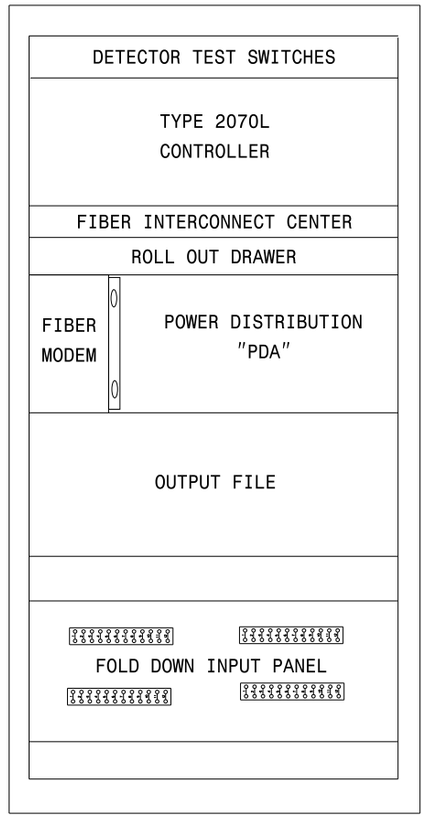

336S CABINET
REAR VIEW

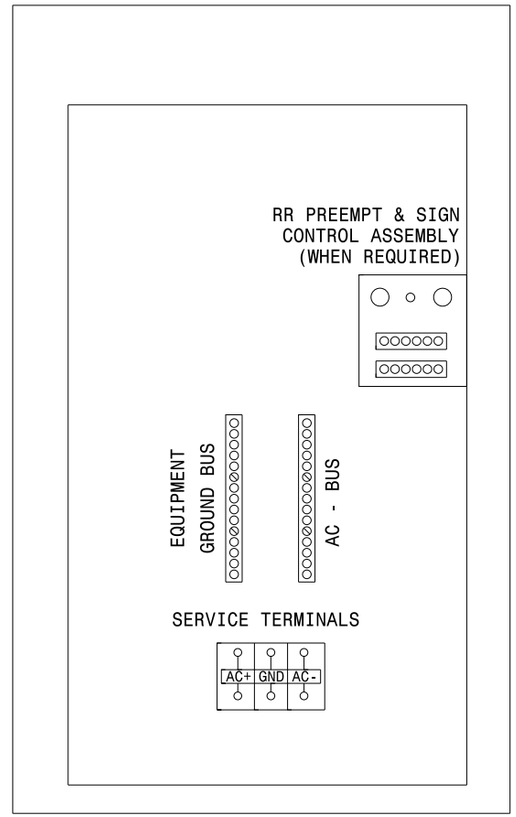

336S CABINET
RIGHT SIDE
REAR VIEW

NOTE

PROVIDE 2" SPACE BETWEEN
CONTROLLER AND ROLL OUT
DRAWER TO ACCOMMODATE
FIBER INTERCONNECT CENTER.

STATE OF
NORTH CAROLINA
DEPT. OF TRANSPORTATION
DIVISION OF HIGHWAYS
RALEIGH, N.C.

1-12

ENGLISH STANDARD DRAWING FOR

CONTROLLERS AND CABINETS

CABINET COMPONENT LAYOUT (POLE MOUNT)

170 CABINET MODEL 336S WITH 2070L CONTROLLER

SHEET 2 OF 2

1751.01

STATE OF
NORTH CAROLINA
DEPT. OF TRANSPORTATION
DIVISION OF HIGHWAYS
RALEIGH, N.C.

1-12

ENGLISH STANDARD DRAWING FOR

CONTROLLER AND CABINETS

POWER, GROUND, AND AUXILIARY POWER SYSTEMS
NEMA TS-2

SHEET 1 OF 1

1751.02

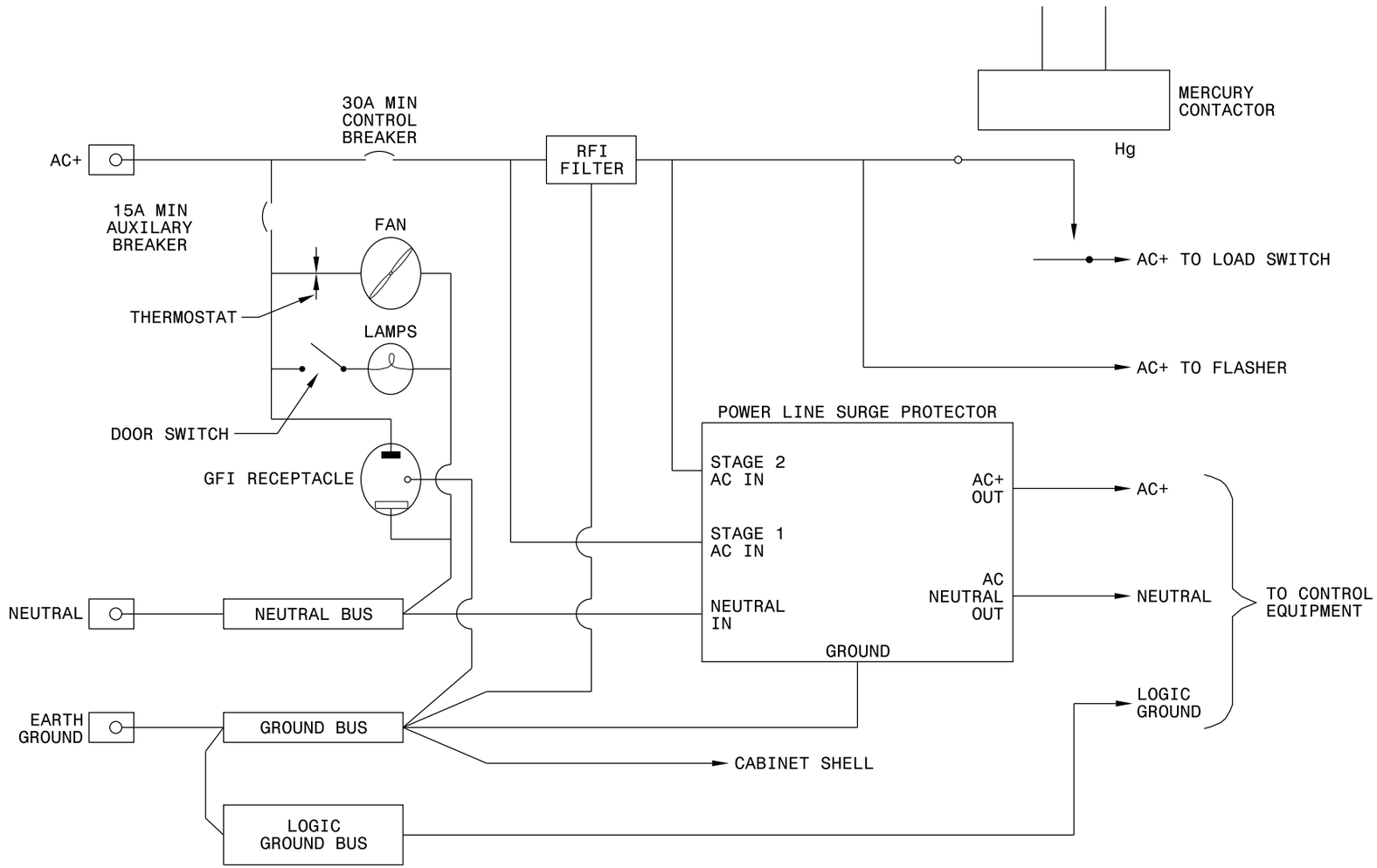

STATE OF
NORTH CAROLINA
DEPT. OF TRANSPORTATION
DIVISION OF HIGHWAYS
RALEIGH, N.C.

1-12

ENGLISH STANDARD DRAWING FOR

CONTROLLERS AND CABINETS

POWER, GROUND, AND AUXILIARY POWER SYSTEMS
NEMA TS-2

SHEET 1 OF 1

1751.02

STATE OF
NORTH CAROLINA
DEPT. OF TRANSPORTATION
DIVISION OF HIGHWAYS
RALEIGH, N.C.

1-12

ENGLISH STANDARD DRAWING FOR
SPREAD SPECTRUM RADIO
RADIO SYSTEM INSTALLATION

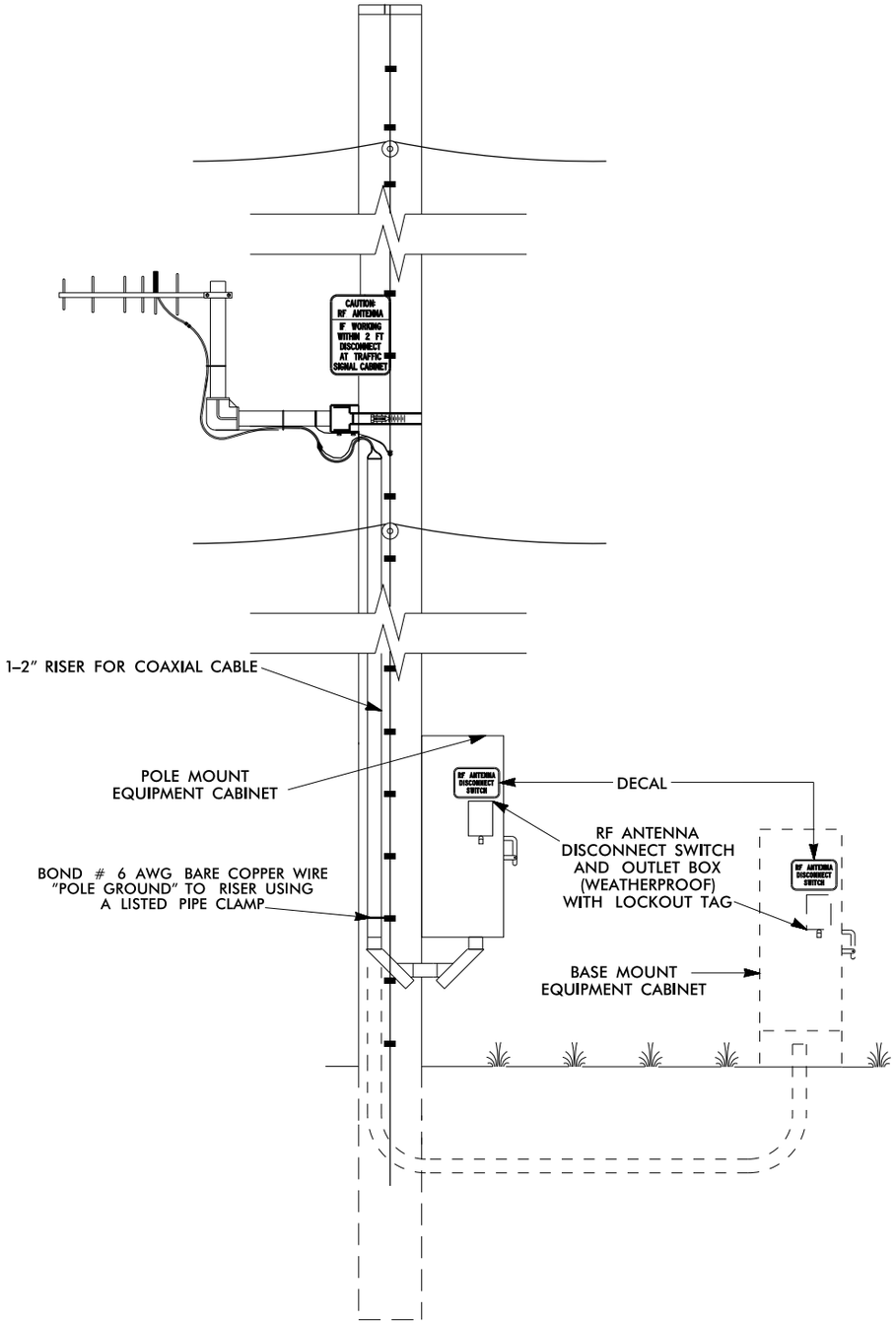

ANTENNA AND COAXIAL CABLE CONNECTION SCHEMATIC

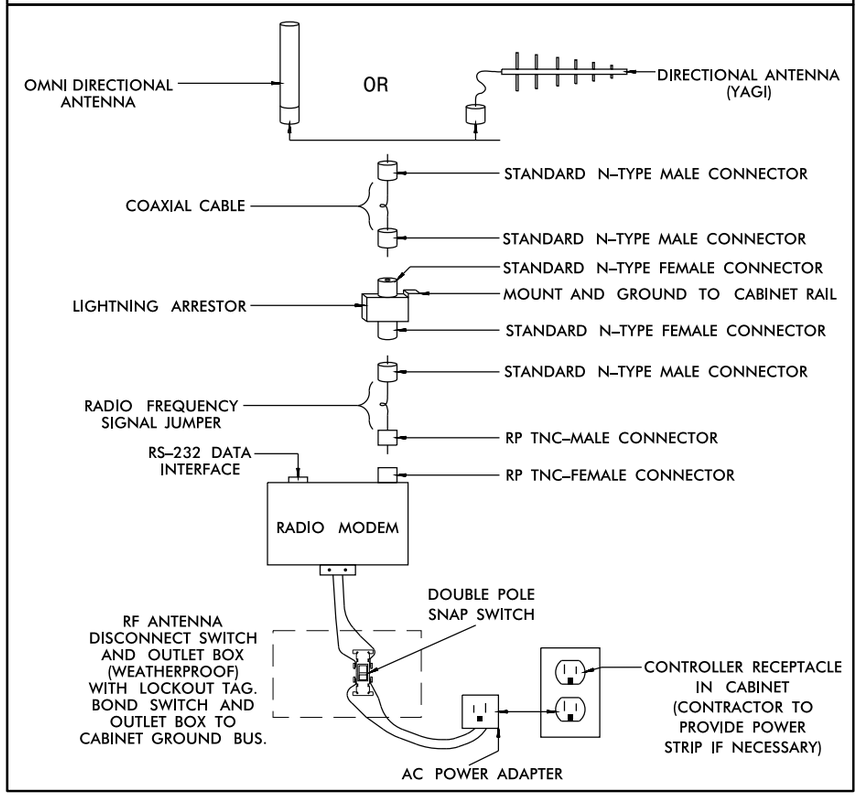

STATE OF
NORTH CAROLINA
DEPT. OF TRANSPORTATION
DIVISION OF HIGHWAYS
RALEIGH, N.C.

1-12

ENGLISH STANDARD DRAWING FOR
SPREAD SPECTRUM RADIO
RADIO SYSTEM INSTALLATION

SHEET 1 OF 5
1756.01

SHEET 1 OF 5
1756.01

STATE OF
NORTH CAROLINA
DEPT. OF TRANSPORTATION
DIVISION OF HIGHWAYS
RALEIGH, N.C.

1-12

ENGLISH STANDARD DRAWING FOR
SPREAD SPECTRUM RADIO
ANTENNA AND COAXIAL CABLE

NOTES

1. WOOD POLE — BOND # 6 AWG SOLID BARE COPPER WIRE TO ANTENNA SUPPORT USING LISTED PIPE CLAMP. BOND OTHER END OF # 6 AWG SOLID BARE COPPER WIRE TO THE POLE GROUND USING A SPLIT BOLT CONNECTOR. BOND SHIELD OF COAXIAL CABLE WITH AN APPROVED GROUNDING SYSTEM (USING #6 AWG STRANDED COPPER WIRE) BONDED TO THE POLE GROUND. WEATHERPROOF THE CONNECTION ONCE THE GROUNDING SYSTEM IS INSTALLED. ENSURE "POLE GROUND" IS IN PLACE.

   METAL POLE — BOND # 6 AWG SOLID BARE COPPER WIRE TO ANTENNA SUPPORT USING LISTED PIPE CLAMP. BOND OTHER END OF # 6 AWG SOLID BARE COPPER WIRE TO THE POLE OR EXISTING SYSTEM GROUND USING A METHOD APPROVED BY THE ENGINEER. BOND SHIELD OF COAXIAL CABLE WITH AN APPROVED GROUNDING SYSTEM (USING #6 AWG STRANDED COPPER WIRE) BONDED TO THE POLE BY A METHOD APPROVED BY THE ENGINEER. WEATHERPROOF THE CONNECTION ONCE THE GROUNDING SYSTEM IS INSTALLED. ENSURE "SYSTEM GROUND" IS IN PLACE.

2. YAGI ANTENNA SHOWN IN VERTICAL POLARIZATION POSITION FOR CLARIFICATION. TYPICALLY INSTALL ANTENNA IN HORIZONTAL POLARIZATION POSITION.

3. TO CONSERVE VERTICAL SPACING ON THE POLE (JOINT–USE OR SIGNAL POLE) WITH REGARDS TO THE SURROUNDING UTILITIES, INSTALL THE ANTENNA MOUNTING HARDWARE USING ONE OF THE TWO METHODS LISTED BELOW: (ENSURE THAT THE MOUNTING METHOD DOES NOT DEGRADE THE ANTENNA'S SIGNAL INTEGRITY)

   A) ROTATE THE VERTICAL SUPPORT ARM 90 DEGREES SUCH THAT THE ANTENNA IS AT THE SAME HEIGHT AS THE HORIZONTAL SUPPORT ARM.

   B) ELIMINATE THE VERTICAL SUPPORT ARM AND MOUNT THE ANTENNA TO THE HORIZONTAL SUPPORT ARM.

   C) ANTENNA, ANTENNA SUPPORT ARM, AND SIGN TO MAINTAIN A 40" SEPARATION FROM NEUTRAL /POWER AND 12" FROM OTHER UTILITIES.

4. INSTALL AN END CAP TO SEAL THE EXPOSED END OF THE MOUNTING PIPE.

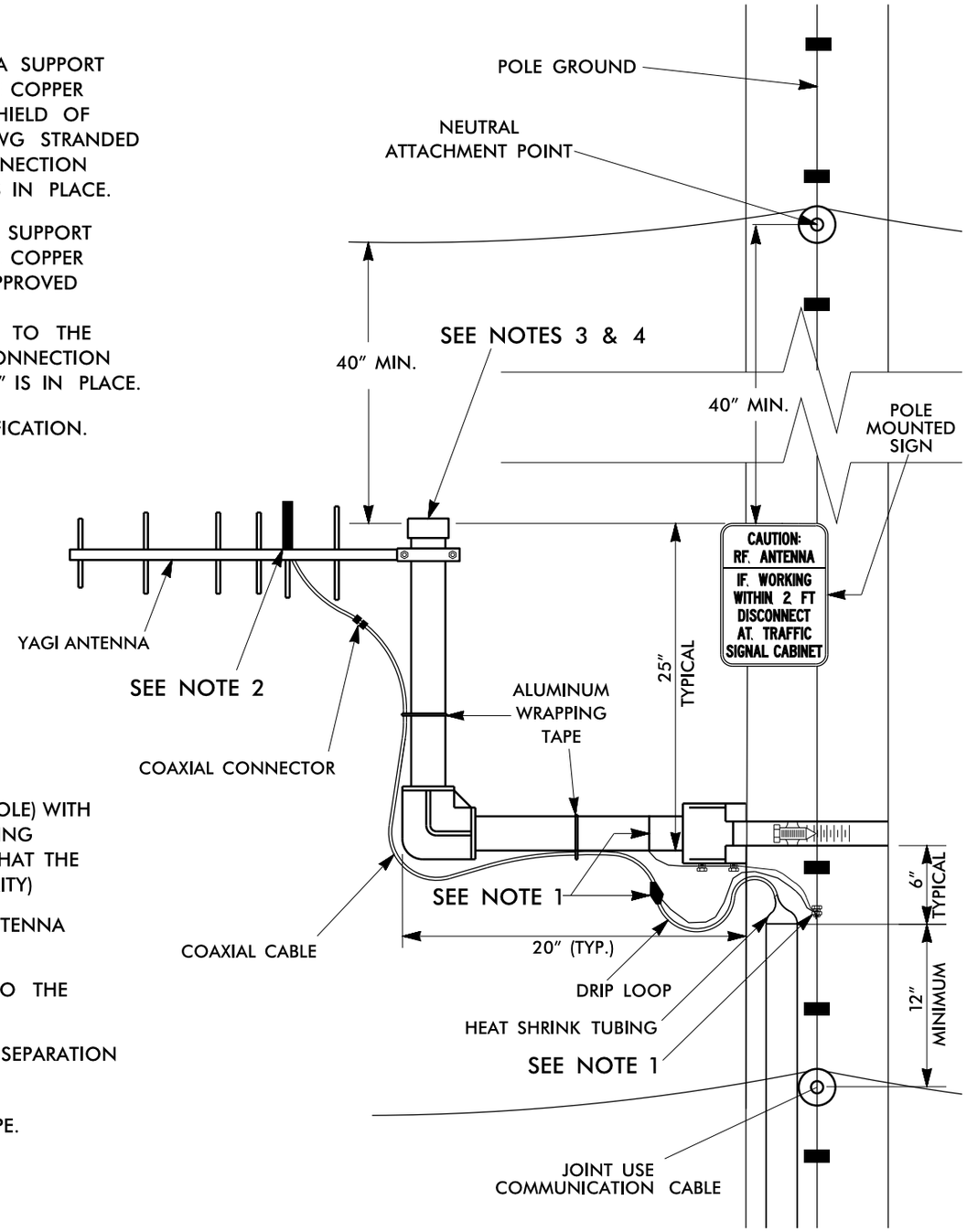

STATE OF
NORTH CAROLINA
DEPT. OF TRANSPORTATION
DIVISION OF HIGHWAYS
RALEIGH, N.C.

1-12

ENGLISH STANDARD DRAWING FOR
SPREAD SPECTRUM RADIO
ANTENNA AND COAXIAL CABLE

SHEET 2 OF 5
1756.01

STATE OF
NORTH CAROLINA
DEPT. OF TRANSPORTATION
DIVISION OF HIGHWAYS
RALEIGH, N.C.

1-12

ENGLISH STANDARD DRAWING FOR
SPREAD SPECTRUM RADIO
RF ANTENNA DISCONNECT DECAL

SHEET 3 OF 5

1756.01

DECAL

SIGN NUMBER: SP05224
TYPE: DECAL
QUANTITY:

SIGN WIDTH: 0′-9″
HEIGHT: 0′-6″
TOTAL AREA: 0.4 Sq.Ft.

BORDER TYPE: FLUSH
RECESS: 0″
WIDTH: 0.25″
RADII: 1″

NO. Z BARS:
LENGTH:

BACKG COLOR: Yellow
COPY COLOR: Black

SYMBOL	X	Y	WID	HT

MAT'L: 0.063″ (1.6 mm) ALUMINUM

USE NOTES: 2, 4

1. Legend and border shall be direct applied Type III reflective sheeting.
2. Legend and border shall be direct applied non-reflective sheeting.
3. Shields shall be Type III reflective sheeting on 0.032″ (0.8mm) aluminum and demountable.
4. Background shall be Type III reflective sheeting.
5. Background shall be Type I reflective sheeting.
6. Center arrow(s) vertically on sign.
7. Bottom panel shall be yellow Type III sheeting. Legend shall be direct applied black non-reflective sheeting. Yellow panel is:

DESIGN BY: S PIOTROWSKI DATE: Jul 18,2005 CHECKED BY: SUSAN B. KUNZ
PROJECT ID: ID DIV:INTELLIGENT TRANSPORTATION SYSTEM

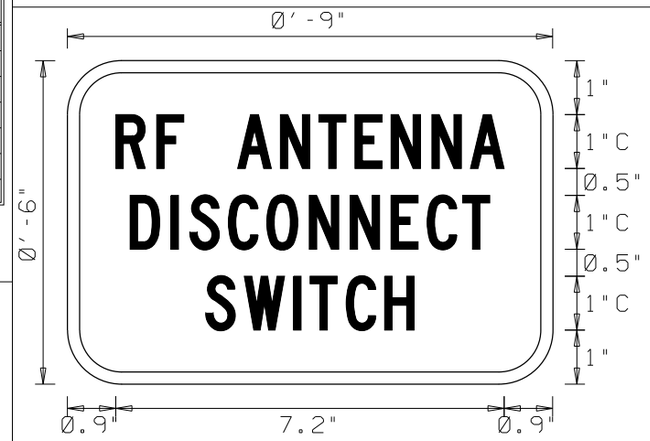

BORDER
R=1″
TH=0.25″

NOTE: THIS SIGN SHALL BE PRODUCED AS A **DECAL**

LETTER POSITIONS

Letter spacings are to start of next letter

																											Series/Size Text Length
	R	F		A	N	T	E	N	N	A																	C1
0.9	0.8	0.5	1	0.8	0.7	0.7	0.7	0.8	0.7	0.6	0.9																7.2
	D	I	S	C	O	N	N	E	C	T																	C1
1.2	0.8	0.3	0.7	0.7	0.8	0.8	0.8	0.7	0.7	0.5	1.2																6.7
	S	W	I	T	C	H																					C1
2.6	0.7	0.9	0.3	0.7	0.7	0.5	2.6																				3.9

Spacing Factor is 1 unless specified otherwise

STATE OF
NORTH CAROLINA
DEPT. OF TRANSPORTATION
DIVISION OF HIGHWAYS
RALEIGH, N.C.

1-12

ENGLISH STANDARD DRAWING FOR
SPREAD SPECTRUM RADIO
RF ANTENNA DISCONNECT DECAL

SHEET 3 OF 5

1756.01

POLE MOUNTED SIGN

SIGN NUMBER: SP05223
TYPE: D
QUANTITY:

SIGN WIDTH: 0′-9″
HEIGHT: 1′-0″
TOTAL AREA: 0.8 Sq.Ft.

BORDER TYPE: FLUSH
RECESS: 0″
WIDTH: 0.2″
RADII: 1″

NO. Z BARS:
LENGTH:

BACKG COLOR: Yellow
COPY COLOR: Black

SYMBOL	X	Y	WID	HT
BAR	0.2	8.2	8.6	1.0

MAT′L: 0.063″ (1.6 mm) ALUMINUM

DESIGN BY: M. TRACEY DATE: Oct 25, 2007 CHECKED BY: SUSAN KUNZ
PROJECT ID: DIV: INTELLIGNET TRANSPORTATION SYSTEMS

USE NOTES: 2, 4

1. Legend and border shall be direct applied Type III reflective sheeting.
2. Legend and border shall be direct applied non-reflective sheeting.
3. Shields shall be Type III reflective sheeting on 0.032″ (0.8mm) aluminum and demountable.
4. Background shall be Type III reflective sheeting.
5. Background shall be Type I reflective sheeting.
6. Center arrow(s) vertically on sign.
7. Bottom panel shall be yellow Type III sheeting. Legend shall be direct applied black non-reflective sheeting. Yellow panel is:

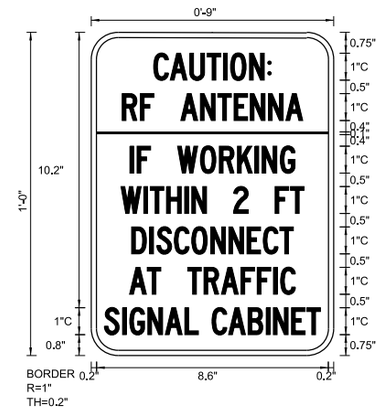

0.60 SPACING FACTOR

LETTER POSITIONS

Letter spacings are to start of next letter

																												Series/Size Text Length
	C	A	U	T	I	O	N	:																				C
2.3	0.6	0.7	0.6	0.6	0.3	0.7	0.7	0.1	2.3																			4.4
	R	F		A	N	T	E	N	N	A																		C
1.1	0.7	0.5	1	0.7	0.6	0.6	0.6	0.7	0.6	0.6	1.1																	6.7
	I	F		W	O	R	K	I	N	G																		C
1.4	0.3	0.5	1	0.8	0.7	0.7	0.6	0.3	0.7	0.5	1.4																	6.1
	W	I	T	H	I	N		2		F	T																	C
1.1	0.9	0.2	0.6	0.7	0.3	0.5	1	0.5	1	0.6	0.5	1.1																6.8
	D	I	S	C	O	N	N	E	C	T																		C
1.5	0.7	0.3	0.6	0.6	0.7	0.7	0.7	0.6	0.6	0.5	1.5																	6
	A	T		T	R	A	F	F	I	C																		C
1.4	0.7	0.5	1	0.6	0.6	0.7	0.6	0.6	0.3	0.6	1.4																	6.2
	S	I	G	N	A	L		C	A	B	I	N	E	T														C
0.5	0.7	0.3	0.7	0.6	0.7	0.5	0.4	0.6	0.7	0.7	0.3	0.7	0.6	0.5	0.5													7.9

STATE OF
NORTH CAROLINA
DEPT. OF TRANSPORTATION
DIVISION OF HIGHWAYS
RALEIGH, N.C.

1-12

ENGLISH STANDARD DRAWING FOR
SPREAD SPECTRUM RADIO
RF ANTENNA WARNING SIGN

SHEET 4 OF 5
1756.01

STATE OF
NORTH CAROLINA
DEPT. OF TRANSPORTATION
DIVISION OF HIGHWAYS
RALEIGH, N.C.

1-12

ENGLISH STANDARD DRAWING FOR
SPREAD SPECTRUM RADIO
RF ANTENNA WARNING SIGN

SHEET 4 OF 5
1756.01

STATE OF
NORTH CAROLINA
DEPT. OF TRANSPORTATION
DIVISION OF HIGHWAYS
RALEIGH, N.C.

1-12

ENGLISH STANDARD DRAWING FOR

SPREAD SPECTRUM RADIO

POWER, GROUND AND AUXILIARY POWER SYSTEMS
FOR STANDALONE REPEATER CABINET

SHEET 5 OF 5

1756.01

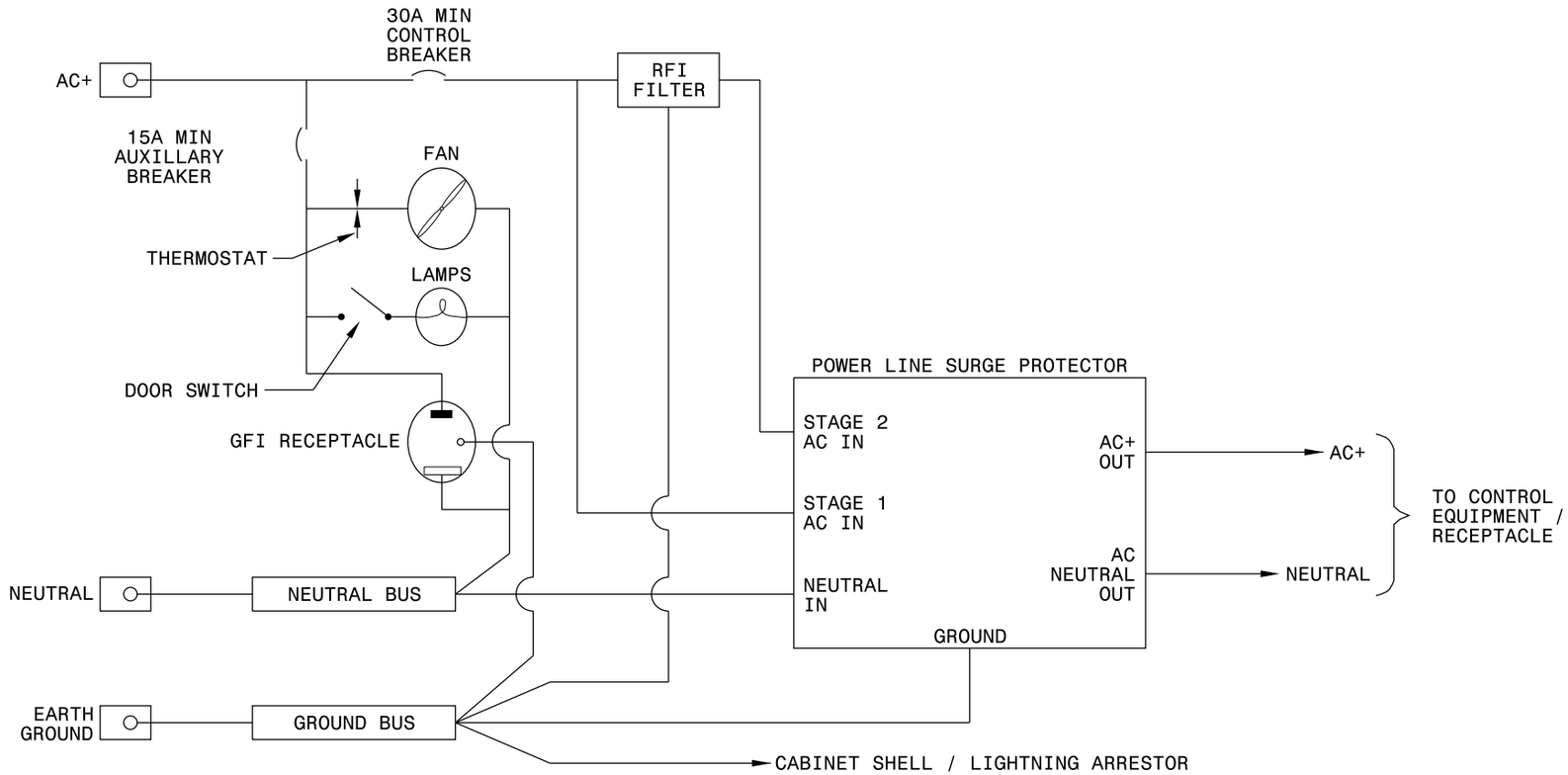

STATE OF
NORTH CAROLINA
DEPT. OF TRANSPORTATION
DIVISION OF HIGHWAYS
RALEIGH, N.C.

1-12

ENGLISH STANDARD DRAWING FOR

SPREAD SPECTRUM RADIO

POWER, GROUND AND AUXILIARY POWER SYSTEMS
FOR STANDALONE REPEATER CABINET

SHEET 5 OF 5

1756.01