STATE OF
NORTH CAROLINA
DEPT. OF TRANSPORTATION
DIVISION OF HIGHWAYS
RALEIGH, N.C.

7-06

METRIC STANDARD DRAWING FOR

CONCRETE "L" ENDWALL FOR SINGLE PIPE CULVERTS

375mm THRU 1200mm PIPE

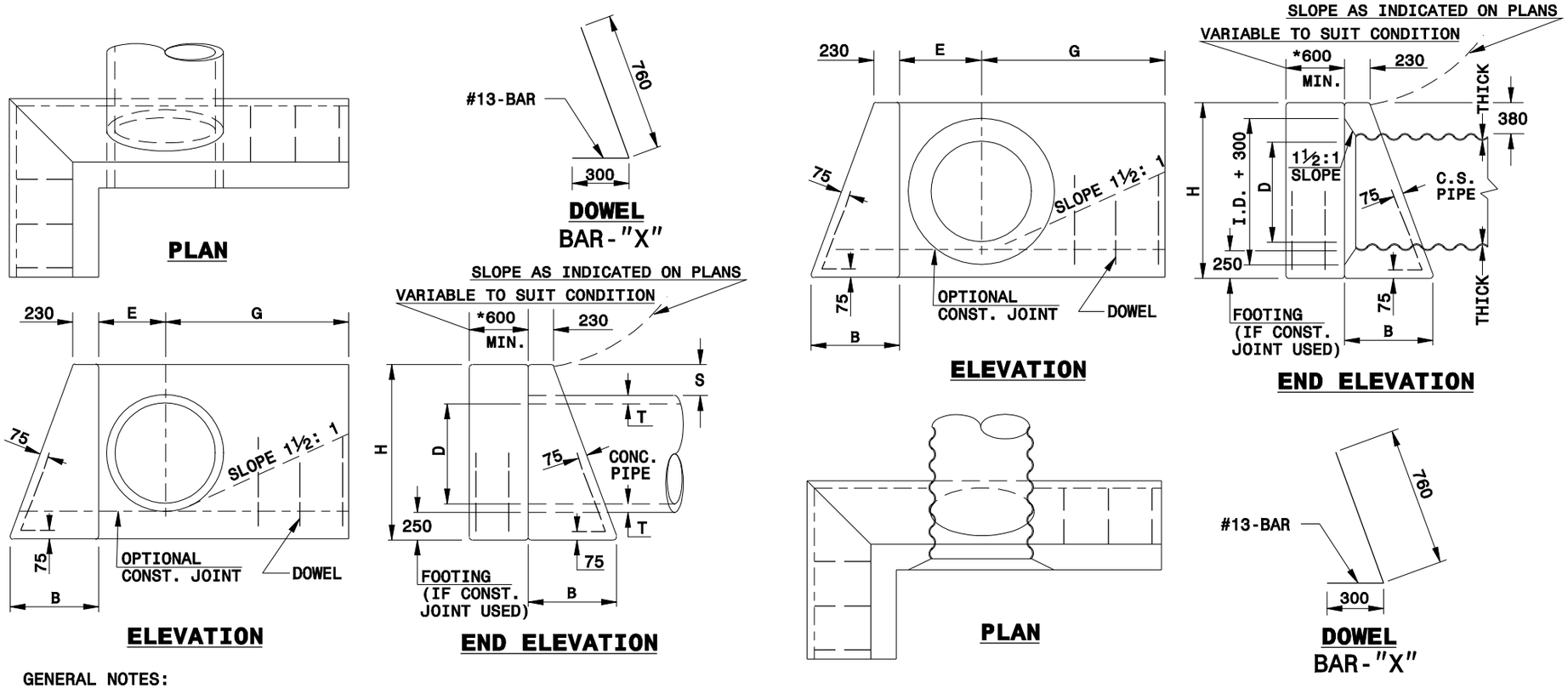

GENERAL NOTES:
- -CHAMFER ALL CORNERS 25mm. USE CLASS "B" CONCRETE.
- -PLACE 2 #19 "Y" BARS IN THE TOP OF ALL ENDWALL FOR PIPE CULVERTS 1050mm AND OVER WITH A MINIMUM OF 75mm COVER AND A LENGTH OF 150mm LESS THAN ENDWALL LENGTH.
- -CONSTRUCT BOTTOM SLAB WITH FORMS.
- -WHEN THE CONTRACTOR ELECTS TO USE A CONSTRUCTION JOINT AT THE BOTTOM OF THE PIPE, PLACE BAR "X" DOWELS IN THE BASE AS SHOWN ON PLANS. SPACE BARS APPROXIMATELY ON 300mm CENTERS UNLESS OTHERWISE DIRECTED BY THE ENGINEER.
- -WHEN THE CONTRACTOR ELECTS TO USE A CONSTRUCTION JOINT AT THE BOTTOM OF THE PIPE AND POUR THE BASE SEPARATELY LEAVE THE POUR ROUGH.
- -DO NOT INTERPRET WALL THICKNESS (T) SHOWN FOR THE THICKNESS ACCEPTABLE, BUT IS USED IN COMPUTING ENDWALL QUANTITIES.

REINFORCING QUANTITIES

DIA.	375	450	600	750	900	1000 C.S.		1050 R.C.		1200 C.S.		1200 R.C.	
BARS	"X"	"X"	"X"	"X"	"X"	"X"	"Y"	"X"	"Y"	"X"	"Y"	"X"	"Y"
QTY.	5	5	6	6	7	7	2	7	2	8	2	8	2
kg.	5	5	6	6	7	19		20		21		22	

*QUANTITIES BASED ON 600mm.

DIMENSIONS AND CONCRETE QUANTITIES

	R.C.P. DIMENSIONS AND VOLUMES							C.S.P. DIMENSIONS AND VOLUMES				
D	H	B	G	E	S	T	m^3	H	B	G	E	m^3
375	1016	508	762	330	267	57	0.7	1016	508	737	432	0.7
450	1092	559	889	381	254	63	0.9	1092	559	838	457	0.9
600	1270	635	1143	457	254	76	1.2	1245	635	1067	533	1.3
750	1448	737	1422	559	254	89	1.9	1397	711	1295	610	1.8
900	1651	838	1727	660	241	121	2.7	1549	787	1524	686	2.3
1050	1829	914	2007	737	241	133	3.5	1702	864	1753	762	3.0
1200	2007	1016	2261	838	241	146	4.5	1854	940	1981	838	3.8

Note:
This drawing is dimensioned in millimeters unless otherwise depicted within the drawing.

SHEET 1 OF 1

838.05

STATE OF
NORTH CAROLINA
DEPT. OF TRANSPORTATION
DIVISION OF HIGHWAYS
RALEIGH, N.C.

7-06

METRIC STANDARD DRAWING FOR

CONCRETE "L" ENDWALL FOR SINGLE PIPE CULVERTS

375mm THRU 1200mm PIPE

SHEET 1 OF 1

838.05