STATE OF
NORTH CAROLINA
DEPT. OF TRANSPORTATION
DIVISION OF HIGHWAYS
RALEIGH, N.C.

7-06

METRIC STANDARD DRAWING FOR

REINFORCED CONCRETE ENDWALL

FOR DOUBLE & TRIPLE 1400mm PIPE - 90° SKEW

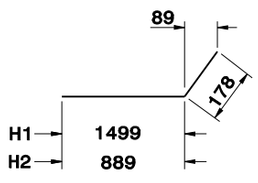

"H" BARS

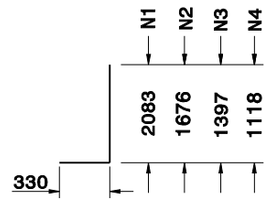

"N" BARS

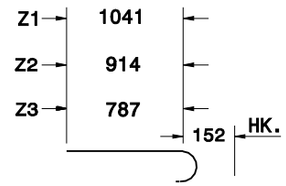

"Z" BARS

"H", "N", & "Z" BAR DIMENSIONS ARE OUT TO OUT.

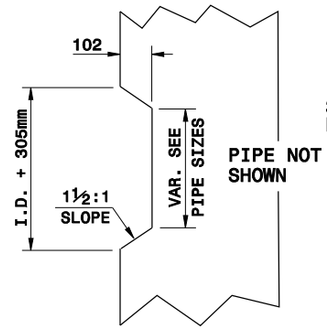

TAPER DETAIL

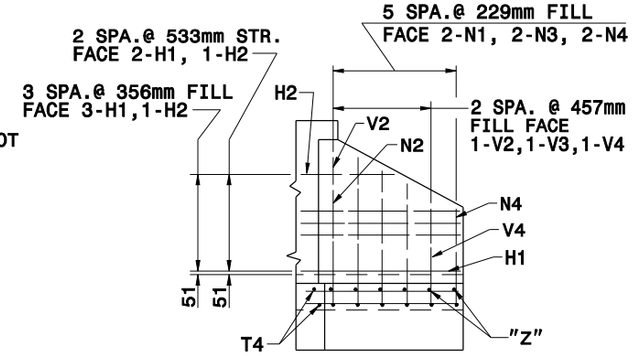

WING ELEVATION

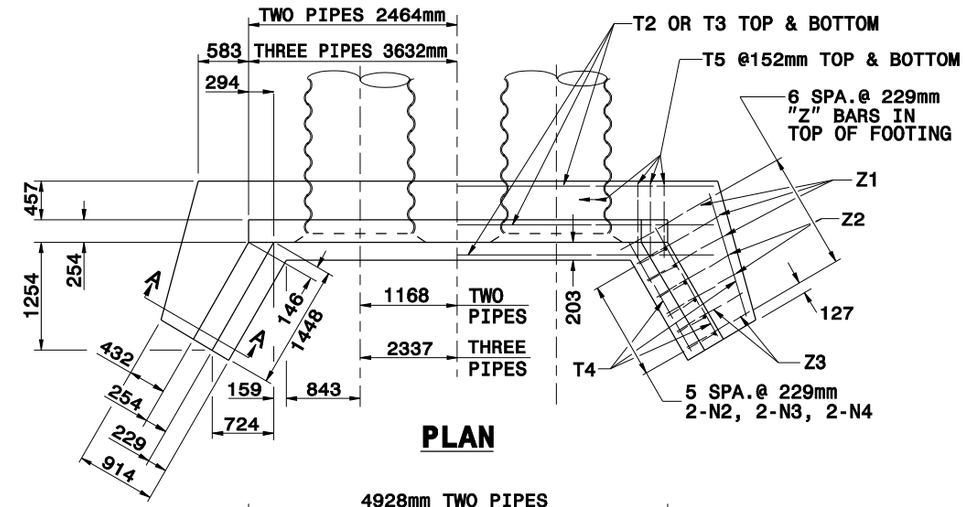

PLAN

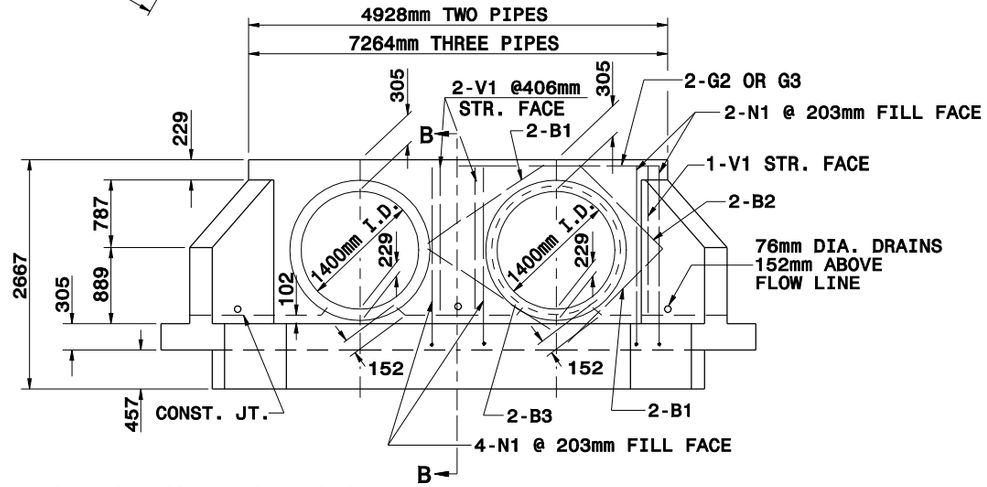

ELEVATION

Note:
This drawing is dimensioned in millimeters unless otherwise depicted within the drawing.

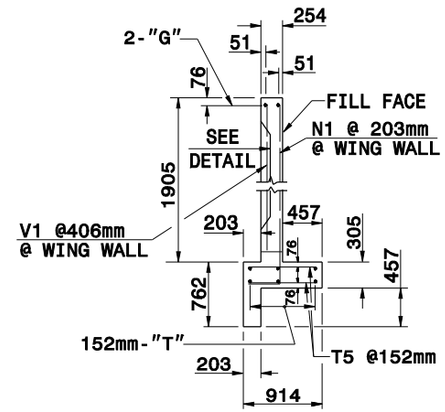

SECTION B-B

PIPE NOT SHOWN

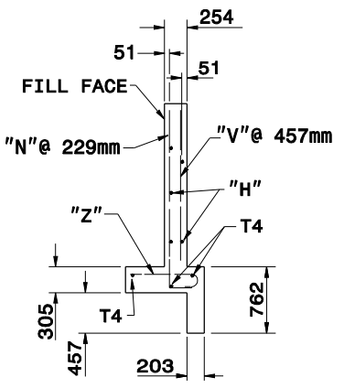

SECTION A-A

SEE STD.# 838.45 FOR GENERAL NOTES.

BILL OF MATERIAL FOR ENDWALL

REINF. STEEL			2 PIPES		3 PIPES	
BAR	SIZE	LENGTH	NO.	WEIGHT	NO.	WEIGHT
B1	#13	1676	8	13	4	20
B2	#13	1372	2	6	4	6
B3	#13	1829	2	2	8	15
G1	#22	2489	-	-	-	-
G2	#22	4826	2	29	-	-
G3	#22	7163	-	-	2	44
H1	#13	1676	10	17	10	17
H2	#13	1067	4	4	4	4
N1	#13	2413	8	19	4	29
N2	#13	2007	4	8	4	8
N3	#13	1727	4	7	4	7
N4	#13	1448	4	6	4	6
T1	#13	3607	-	-	-	-
T2	#13	5944	6	36	-	-
T3	#13	8280	-	-	6	49
T4	#13	1600	6	10	6	10
T5	#13	762	64	49	96	73
V1	#13	1753	4	7	6	11
V2	#13	1473	2	3	2	3
V3	#13	1194	2	2	2	2
V4	#13	940	2	3	2	2
Z1	#13	1194	6	7	6	7
Z2	#13	1067	4	4	4	4
Z3	#13	940	4	4	4	4
REINF. STEEL kg.				366		483
CON./C.S. m^3			5.5		7.1	

STATE OF
NORTH CAROLINA
DEPT. OF TRANSPORTATION
DIVISION OF HIGHWAYS
RALEIGH, N.C.

7-06

METRIC STANDARD DRAWING FOR

REINFORCED CONCRETE ENDWALL

FOR DOUBLE & TRIPLE 1400mm PIPE - 90° SKEW

SHEET 2 OF 2
838.22