STATE OF
NORTH CAROLINA
DEPT. OF TRANSPORTATION
DIVISION OF HIGHWAYS
RALEIGH, N.C.

7-06

METRIC STANDARD DRAWING FOR

REINFORCED CONCRETE ENDWALL

FOR SINGLE 1500mm PIPE - 90° SKEW

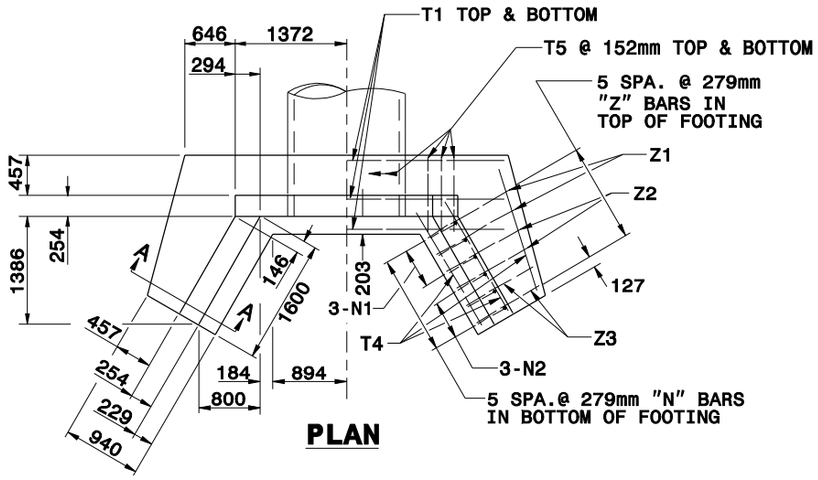

PLAN

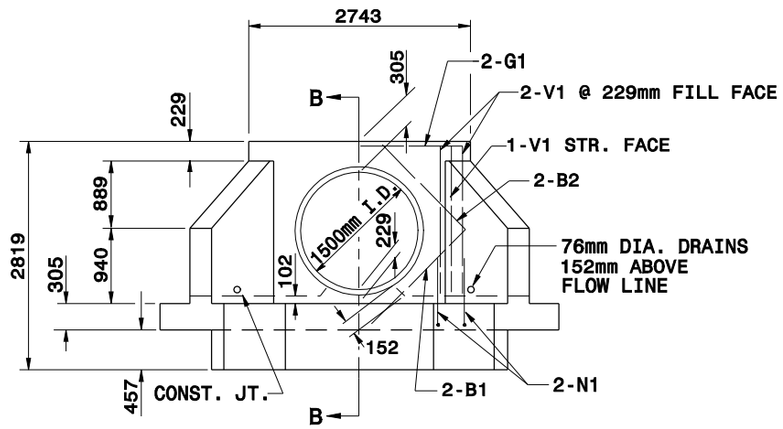

ELEVATION

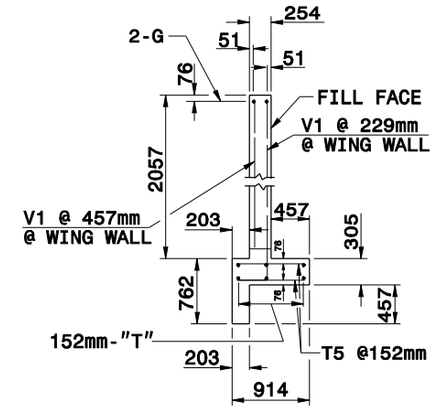

SECTION B-B

PIPE NOT SHOWN

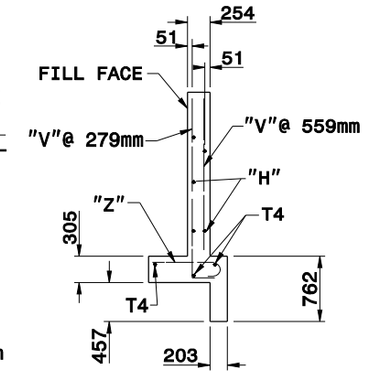

SECTION A-A

SEE STD.# 838.45 FOR GENERAL NOTES.

BILL OF MATERIAL FOR ENDWALL

REINF. STEEL			1 PIPE	
BAR	SIZE	LENGTH	NO.	WEIGHT
B1	#13	1676	4	7
B2	#13	1372	4	6
G1	#22	2642	2	16
H1	#13	1829	10	18
H2	#13	1219	4	5
N1	#13	1194	10	12
N2	#13	1041	6	6
T1	#13	3861	6	23
T4	#13	1676	6	10
T5	#13	762	36	27
V1	#13	1905	6	11
V2	#13	1549	6	9
V3	#13	1194	6	7
V4	#13	838	6	5
Z1	#13	1321	4	5
Z2	#13	1168	4	5
Z3	#13	965	4	4
REINF. STEEL kg.				176
CON./R.C. m^3				4.3

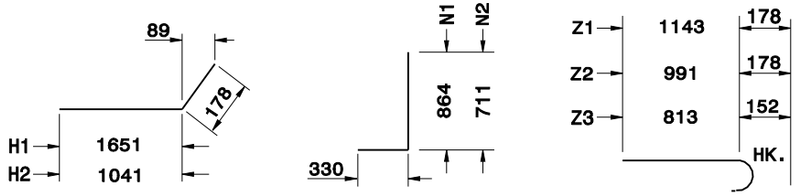

"H" BARS "N" BARS "Z" BARS

"H", "N", & "Z" BAR DIMENSIONS ARE OUT TO OUT.

Note:
This drawing is dimensioned in millimeters unless otherwise depicted within the drawing.

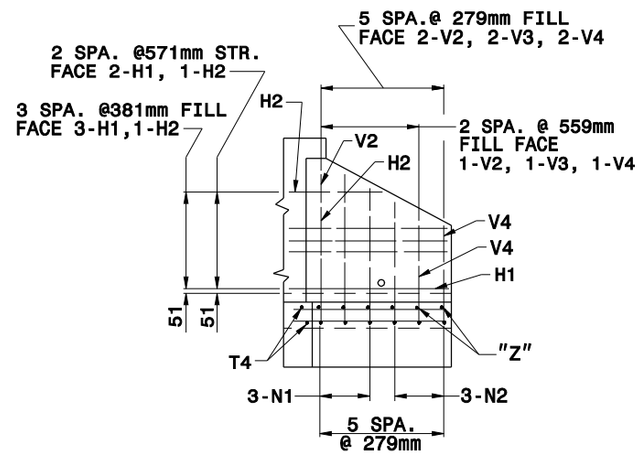

WING ELEVATION

STATE OF
NORTH CAROLINA
DEPT. OF TRANSPORTATION
DIVISION OF HIGHWAYS
RALEIGH, N.C.

7-06

METRIC STANDARD DRAWING FOR

REINFORCED CONCRETE ENDWALL

FOR SINGLE 1500mm PIPE - 90° SKEW

SHEET 1 OF 2

838.27

SHEET 1 OF 2

838.27