STATE OF
NORTH CAROLINA
DEPT. OF TRANSPORTATION
DIVISION OF HIGHWAYS
RALEIGH, N.C.

7-06

METRIC STANDARD DRAWING FOR

REINFORCED CONCRETE ENDWALL

FOR DOUBLE & TRIPLE

1650mm PIPE - 90° SKEW

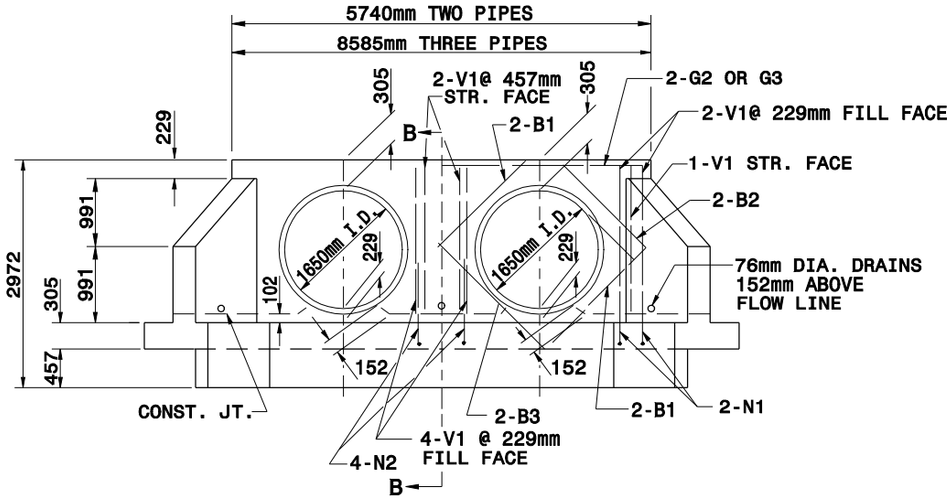

ELEVATION

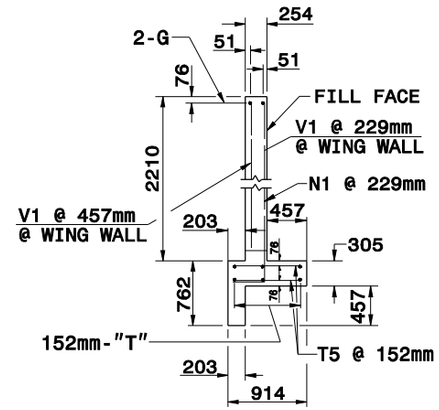

SECTION B-B

PIPE NOT SHOWN

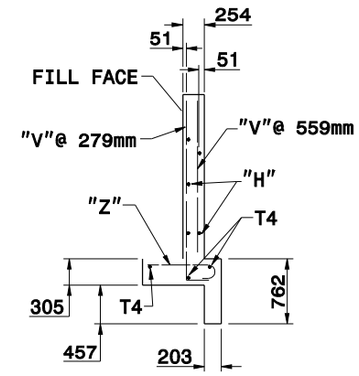

SECTION A-A

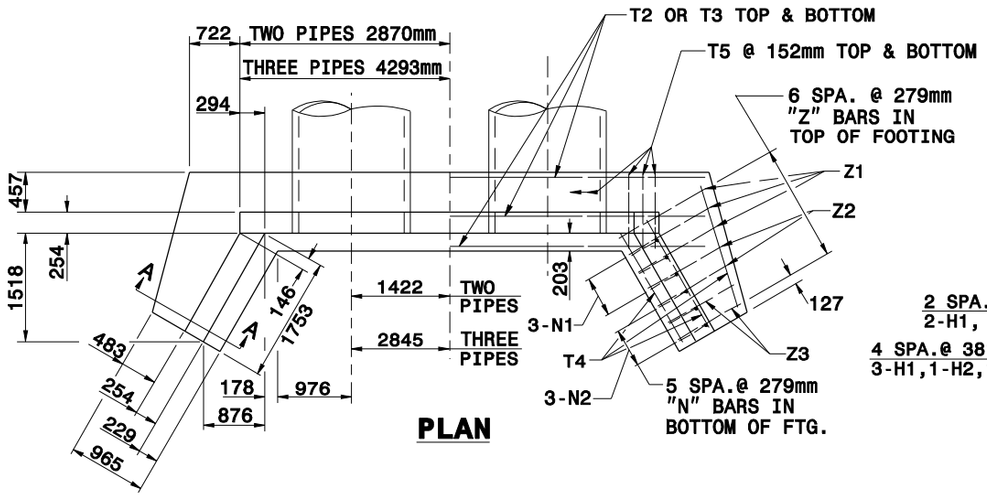

PLAN

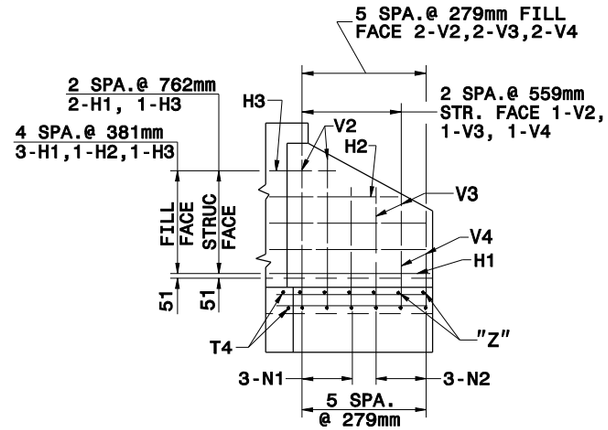

WING ELEVATION

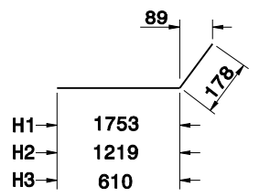

"H" BARS

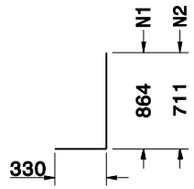

"N" BARS

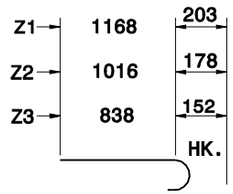

"Z" BARS

Note:
This drawing is dimensioned in millimeters unless otherwise depicted within the drawing.

"H", "N", & "Z" BAR DIMENSIONS ARE OUT TO OUT.

SEE STD.# 838.45 FOR GENERAL NOTES.

BILL OF MATERIAL FOR ENDWALL

REINF. STEEL			2 PIPES		3 PIPES	
BAR	SIZE	LENGTH	NO.	WEIGHT	NO.	WEIGHT
B1	#13	1676	8	13	12	20
B2	#13	1372	4	6	4	6
B3	#13	2134	4	9	8	17
G2	#22	5639	2	34	-	-
G3	#22	8484	-	-	2	52
H1	#13	1930	10	19	10	19
H2	#13	1397	2	3	2	3
H3	#13	787	4	3	4	3
N1	#16	1194	14	26	18	33
N2	#13	1041	6	6	6	6
T2	#13	7010	6	42		
T3	#13	5131			12	61
T4	#13	1829	6	11	6	11
T5	#13	762	76	58	112	84
V1	#13	2057	12	25	18	37
V2	#13	1575	6	9	6	9
V3	#13	1245	6	7	6	7
V4	#13	889	6	5	6	5
Z1	#19	1372	6	18	6	18
Z2	#19	1194	4	11	4	11
Z3	#13	991	4	4	4	4
REINF. STEEL kg.				233		482
CON./R.C.		m^3	6.7		8.5	

STATE OF
NORTH CAROLINA
DEPT. OF TRANSPORTATION
DIVISION OF HIGHWAYS
RALEIGH, N.C.

7-06

METRIC STANDARD DRAWING FOR

REINFORCED CONCRETE ENDWALL

FOR DOUBLE & TRIPLE

1650mm PIPE - 90° SKEW

SHEET 1 OF 2

838.34