STATE OF
NORTH CAROLINA
DEPT. OF TRANSPORTATION
DIVISION OF HIGHWAYS
RALEIGH, N.C.

7-06

METRIC STANDARD DRAWING FOR

REINFORCED CONCRETE ENDWALL

FOR DOUBLE AND TRIPLE
1800mm PIPE 90° SKEW

SHEET 2 OF 2

838.40

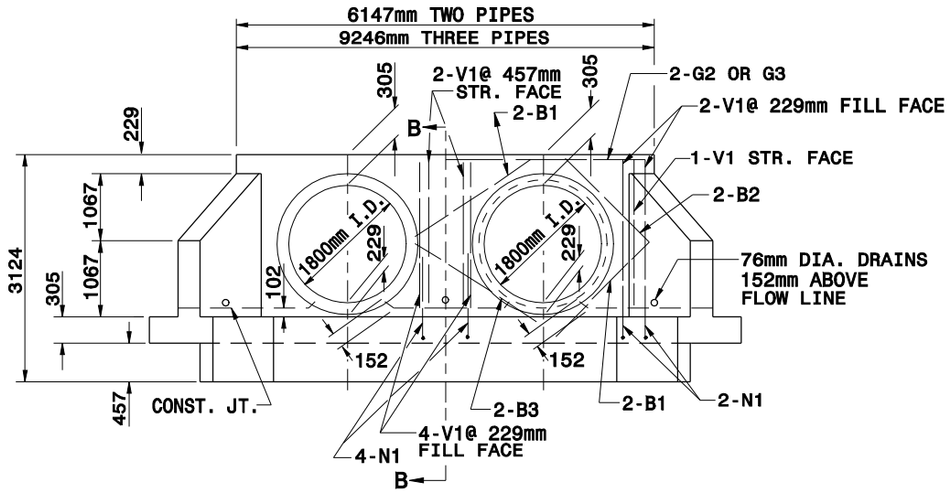

ELEVATION

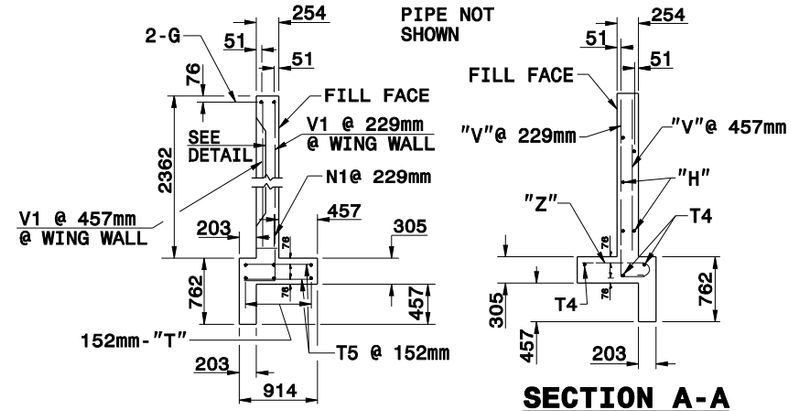

SECTION B-B

SECTION A-A

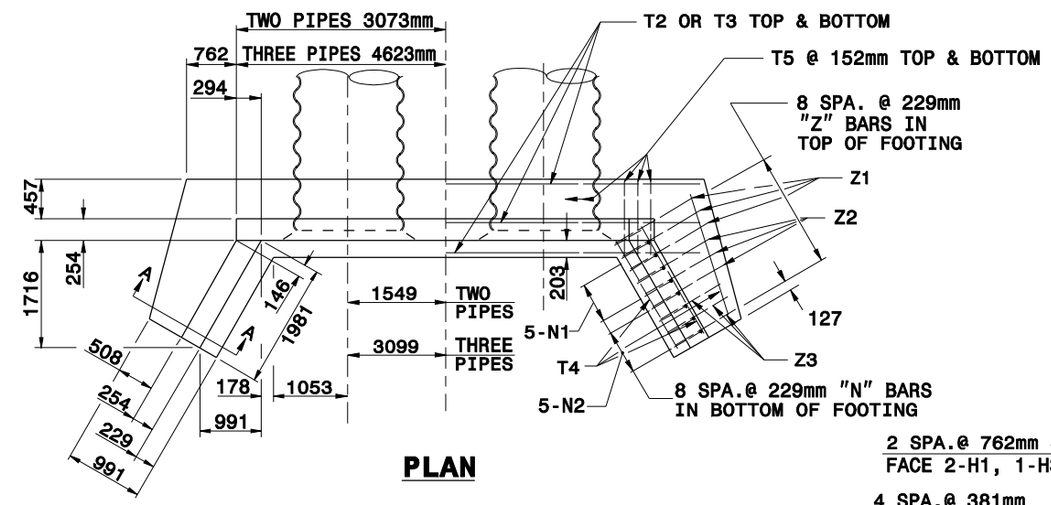

PLAN

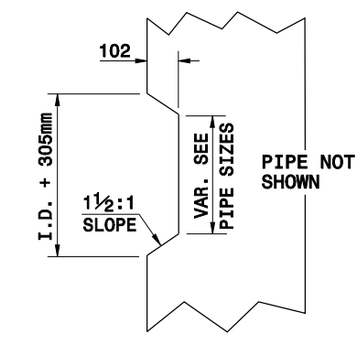

TAPER DETAIL

SEE STD.# 838.45 FOR GENERAL NOTES.

BILL OF MATERIAL FOR ENDWALL

REINF. STEEL			2 PIPES		3 PIPES	
BAR	SIZE	LENGTH	NO.	WEIGHT	NO.	WEIGHT
B1	#13	1676	8	13	12	20
B2	#13	1372	4	6	4	6
B3	#13	2134	4	9	8	17
G2	#22	6045	2	37	-	-
G3	#22	9144	-	-	2	56
H1	#13	2184	10	22	10	22
H2	#13	1676	2	3	2	3
H3	#13	1041	4	4	4	4
N1	#16	1194	18	33	22	41
N2	#13	1041	8	8	8	8
T2	#13	7518	6	45		
T3	#13	5512			12	66
T4	#13	2057	6	12	6	12
T5	#13	762	80	61	122	92
V1	#13	2210	12	26	18	40
V2	#13	1778	10	18	10	18
V3	#13	1524	6	9	6	9
V4	#13	1245	6	7	6	7
V5	#13	965	6	6	6	6
Z1	#19	1422	6	19	6	19
Z2	#16	1219	6	11	6	11
Z3	#13	1016	6	6	6	6
REINF. STEEL kg.				273		545
CON./C.S.		m^3		8.0		10.4

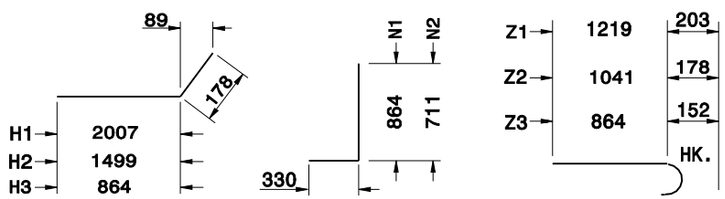

"H" BARS "N" BARS "Z" BARS

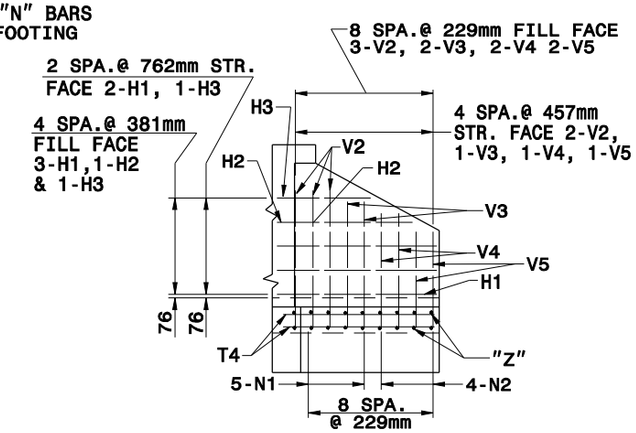

WING ELEVATION

Note:
This drawing is dimensioned in millimeters unless otherwise depicted within the drawing.

STATE OF
NORTH CAROLINA
DEPT. OF TRANSPORTATION
DIVISION OF HIGHWAYS
RALEIGH, N.C.

7-06

METRIC STANDARD DRAWING FOR

REINFORCED CONCRETE ENDWALL

FOR DOUBLE AND TRIPLE
1800mm PIPE 90° SKEW

SHEET 2 OF 2

838.40