STATE OF
NORTH CAROLINA
DEPT. OF TRANSPORTATION
DIVISION OF HIGHWAYS
RALEIGH, N.C.

7-06

METRIC STANDARD DRAWING FOR

# CONCRETE OPEN THROAT CATCH BASIN

300mm THRU 1200mm PIPE

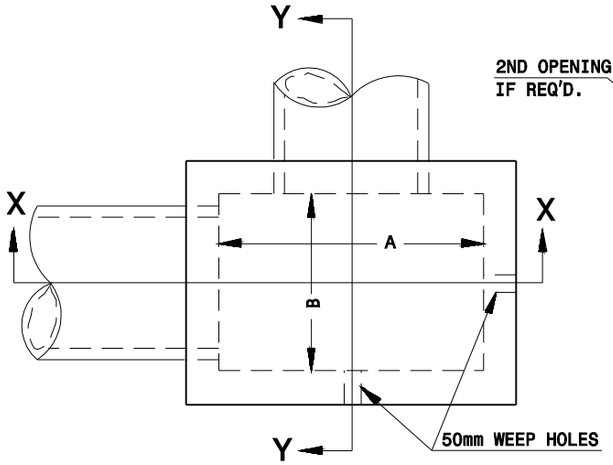


PLAN

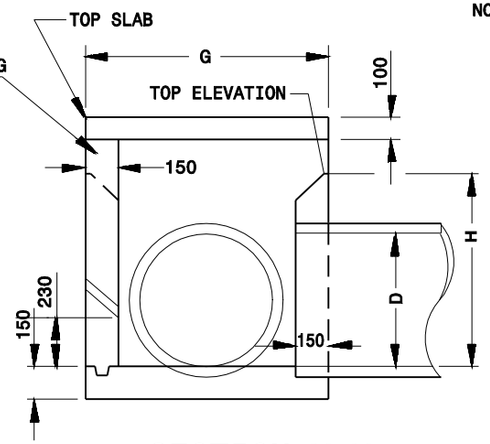


SECTION Y-Y

NOTES:

USE CLASS "B" CONCRETE THROUGHOUT.

PROVIDE ALL CATCH BASINS OVER 1.0m IN DEPTH WITH STEPS 300mm ON CENTER. USE STEPS WHICH COMPLY WITH STD. DRAWING 840.66.

OPTIONAL CONSTRUCTION - MONOLITHIC POUR, 50mm KEYWAY, OR #13 BAR DOWELS AT 300mm CENTERS AS DIRECTED BY THE ENGINEER.

USE FORMS FOR THE CONSTRUCTION OF THE BOTTOM SLAB.

IF REINFORCED CONCRETE PIPE IS SET IN BOTTOM SLAB OF BOX, ADD TO SLAB AS SHOWN ON STD. NO. 840.00.

FOR 2.4m IN HEIGHT OR LESS USE 150mm WALLS AND BOTTOM SLAB. OVER 2.4m TO 4.9 IN HEIGHT USE 200mm WALLS AND BOTTOM SLAB. ADJUST QUANTITIES ACCORDINGLY.

CONSTRUCT WITH PIPE CROWNS MATCHING.

MAX. DEPTH OF THIS STRUCTURE FROM TOP OF BOTTOM SLAB TO TOP ELEV. IS 4.9 METERS.

INSTALL 50mm WEEPHOLES AS DIRECTED BY THE ENGINEER.

INSTALL STONE DRAINS, OF A MINIMUM OF 0.028 CUBIC METERS OF NO. 78M STONE IN A POROUS FABRIC BAG OR WRAP, AT EACH WEEP HOLE OR AS DIRECTED BY THE ENGINEER.

CHAMFER ALL EXPOSED CORNERS 25mm.

DRAWING NOT TO SCALE.

*INCREASE THE SIZE OF THE 150mm OPENING TO 200mm MAX., AS DIRECTED BY THE ENGINEER BY ADDING 50mm TO THE WALL HIEGHT ABOVE THE TOP ELEVATION. ADJUST QUANTITIES ACCORDINGLY.

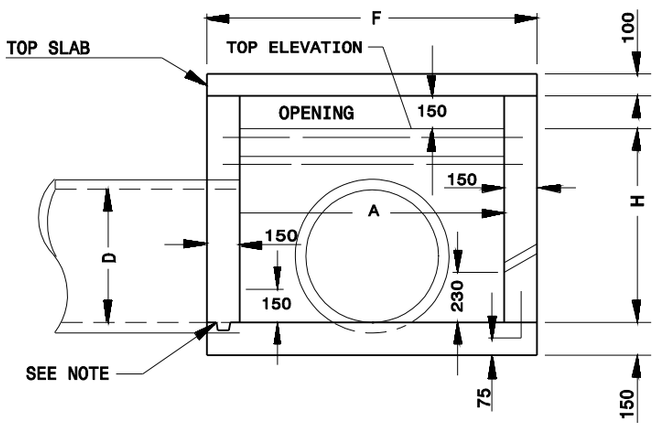


SECTION X-X

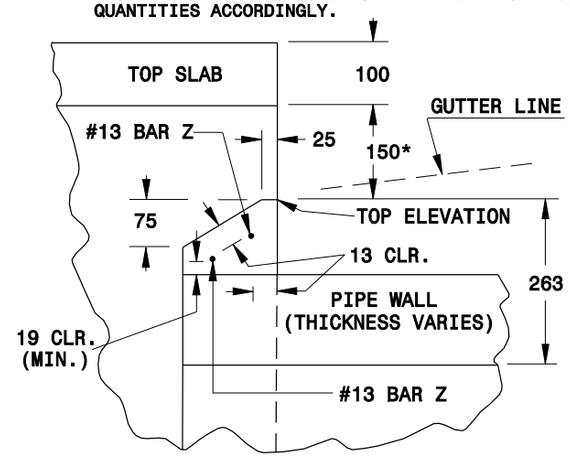


PART SECTION Y-Y

SHOWING DETAILS AT OPENING

MIN. DIMENSIONS AND QUANTITIES FOR CONCRETE CATCH BASIN (BASED ON MIN. HEIGHT, H)

| DIM'S OF BOX & PIPE | | | | REINFORCING | | | | | | SLAB DIMENSIONS | | CU. m. CONC. IN BOX | | | TOTAL QUANTITIES BOX & COVER | | DEDUCTION ONE PIPE | | DED. ONE 150mm THROAT OPENING |
|---|---|---|---|---|---|---|---|---|---|---|---|---|---|---|---|---|---|---|---|
| PIPE | SPAN | WIDTH | HEIGHT | BARS - X | | BARS - Y | | BARS - Z | | | | | | | | | | | |
| D | A | B | H | QTY | LENGTH | QTY | LENGTH | QTY | LENGTH | F | G | TOP SLAB | BOT. SLAB | WALL/m. HT. | kg. REINF. | $m^3$ (MIN H) | C.S. | R.C. | $m^3$ |
| 300 | 1067 | 686 | 558 | 4 | 914 | 6 | 1295 | 2 | 1295 | 1372 | 991 | 0.134 | 0.207 | 0.627 | 12 | 0.834 | 0.011 | 0.024 | 0.034 |
| 375 | 1067 | 686 | 635 | 4 | 914 | 6 | 1295 | 2 | 1295 | 1372 | 991 | 0.134 | 0.207 | 0.627 | 12 | 0.834 | 0.017 | 0.027 | 0.034 |
| 450 | 1219 | 813 | 711 | 5 | 1041 | 7 | 1448 | 2 | 1448 | 1524 | 1118 | 0.173 | 0.260 | 0.712 | 16 | 1.145 | 0.025 | 0.037 | 0.038 |
| 600 | 1219 | 813 | 863 | 5 | 1041 | 7 | 1448 | 2 | 1448 | 1524 | 1118 | 0.173 | 0.260 | 0.712 | 16 | 1.145 | 0.045 | 0.065 | 0.038 |
| 750 | 1219 | 1067 | 1016 | 5 | 1295 | 9 | 1448 | 2 | 1448 | 1524 | 1372 | 0.212 | 0.318 | 0.787 | 19 | 1.317 | 0.070 | 0.097 | 0.038 |
| 900 | 1372 | 1219 | 1167 | 5 | 1448 | 10 | 1600 | 2 | 1600 | 1676 | 1524 | 0.260 | 0.390 | 0.883 | 23 | 1.533 | 0.100 | 0.136 | 0.038 |
| 1050 | 1524 | 1372 | 1320 | 5 | 1600 | 12 | 1753 | 2 | 1753 | 1829 | 1676 | 0.311 | 0.467 | 0.976 | 29 | 1.754 | 0.137 | 0.185 | 0.038 |
| 1200 | 1676 | 1524 | 1472 | 5 | 1753 | 13 | 1753 | 2 | 1753 | 1829 | 1829 | 0.339 | 0.509 | 1.021 | 31 | 1.869 | 0.179 | 0.242 | 0.043 |

**Note:**
**This drawing is dimensioned in millimeters unless otherwise depicted within the drawing.**

SHEET 1 OF 2

840.04

STATE OF
NORTH CAROLINA
DEPT. OF TRANSPORTATION
DIVISION OF HIGHWAYS
RALEIGH, N.C.

7-06

METRIC STANDARD DRAWING FOR

CONCRETE OPEN THROAT CATCH BASIN

300mm THRU 1200mm PIPE

SHEET 1 OF 2

840.04