STATE OF
NORTH CAROLINA
DEPT. OF TRANSPORTATION
DIVISION OF HIGHWAYS
RALEIGH, N.C.

7-06

METRIC STANDARD DRAWING FOR

BRICK OPEN THROAT CATCH BASIN

300mm THRU 1200mm PIPE

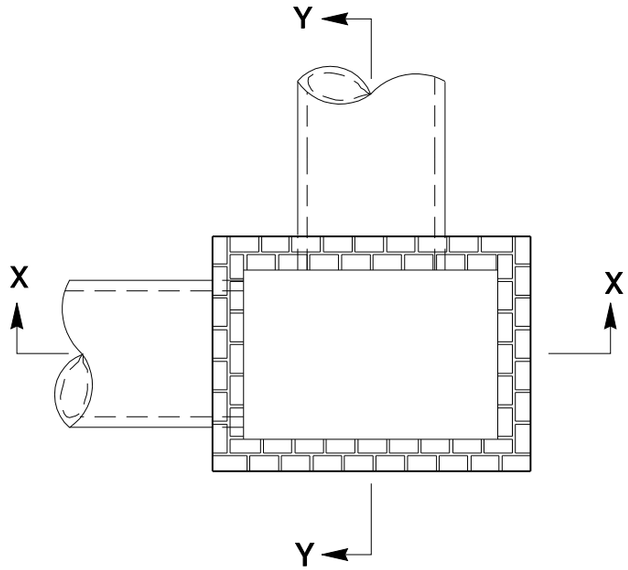

PLAN

USE CLASS "B" CONCRETE THROUGHOUT.

PROVIDE ALL CATCH BASINS OVER 1.0m IN DEPTH WITH STEPS 300mm ON CENTER. USE STEPS WHICH COMPLY WITH STD. DRAWING 840.66.

OPTIONAL CONSTRUCTION - MONOLITHIC POUR, 50mm KEYWAY, OR #13 BAR DOWELS AT 300mm CENTERS AS DIRECTED BY THE ENGINEER.

USE FORMS FOR THE CONSTRUCTION OF THE BOTTOM SLAB.

IF REINFORCED CONCRETE PIPE IS SET IN BOTTOM SLAB OF BOX, ADD TO SLAB AS SHOWN ON STD. NO. 840.00.

FOR 2.4m IN HEIGHT OR LESS USE 150mm WALLS AND BOTTOM SLAB. OVER 2.4m TO 4.9 IN HEIGHT USE 200mm WALLS AND BOTTOM SLAB. ADJUST QUANTITIES ACCORDINGLY.

CONSTRUCT WITH PIPE CROWNS MATCHING.

MAX. DEPTH OF THIS STRUCTURE FROM TOP OF BOTTOM SLAB TO TOP ELEV. IS 4.9 METERS.

INSTALL 50mm WEEPHOLES AS DIRECTED BY THE ENGINEER.

INSTALL STONE DRAINS, OF A MINIMUM OF 0.028 CUBIC METERS OF NO. 78M STONE IN A POROUS FABRIC BAG OR WRAP, AT EACH WEEP HOLE OR AS DIRECTED BY THE ENGINEER.

CHAMFER ALL EXPOSED CORNERS 25mm.

DRAWING NOT TO SCALE.

* INCREASE THE SIZE OF THE 150mm OPENING TO 200mm MAX., AS DIRECTED BY THE ENGINEER BY ADDING 50mm TO THE WALL HIEGHT ABOVE THE TOP ELEVATION. ADJUST QUANTITIES ACCORDINGLY.

JUMBO BRICK WILL BE PERMITTED. CONCRETE BRICK OR 100mm SOLID CONCRETE BLOCK MAY BE USED IN LIEU OF CLAY BRICK.

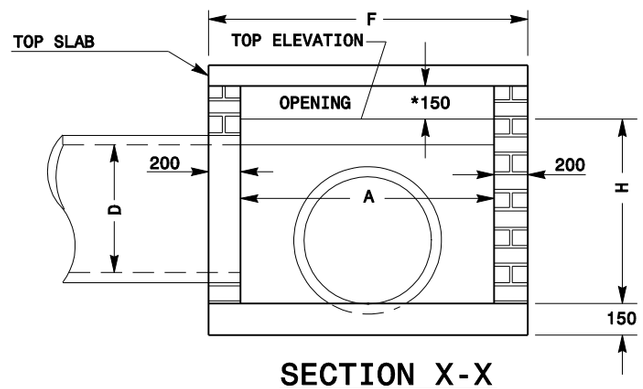

SECTION X-X

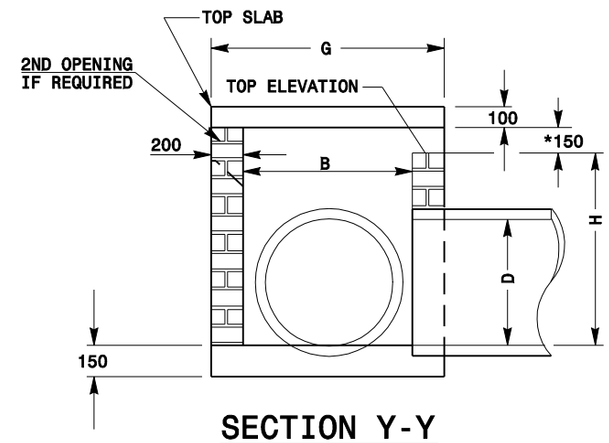

SECTION Y-Y

Note:
This drawing is dimensioned in millimeters unless otherwise depicted within the drawing.

DIM'S OF BOX & PIPE				REINFORCING					SLAB DIMENSIONS		M^3 CONC. IN BOX			TOTAL BRICK MASONRY		DEDUCTION ONE PIPE		DED. ONE 150mm THROAT OPENING
PIPE	SPAN	WIDTH	HEIGHT	BARS - X		BARS - Y		TOTAL										
D	A	B	H	QTY	LENGTH	QTY	LENGTH	KG	F	G	TOP SLAB	BOTTOM SLAB	TOTAL	PER M. HEIGHT	MIN. H	C.S.	R.C.	M^3
300	1067	686	558	5	1016	7	1397	12	1473	1092	0.163	0.245	0.408	0.876	0.623	0.015	0.024	0.032
375	1067	686	635	5	1016	7	1397	12	1473	1092	0.163	0.245	0.408	0.876	0.691	0.023	0.035	0.032
450	1219	813	711	6	1143	8	1549	15	1626	1219	0.201	0.302	0.503	0.991	0.880	0.033	0.049	0.037
600	1219	813	863	6	1143	8	1549	15	1626	1219	0.201	0.302	0.503	0.991	1.032	0.059	0.086	0.037
750	1219	1067	1016	6	1397	9	1549	17	1626	1473	0.243	0.364	0.607	1.093	1.305	0.093	0.130	0.037
900	1372	1219	1167	6	1549	9	1702	17	1777	1626	0.294	0.440	0.734	1.216	1.500	0.134	0.182	0.037
1050	1524	1372	1320	6	1702	9	1854	17	1929	1777	0.349	0.523	0.872	1.342	1.639	0.183	0.247	0.037
1200	1676	1524	1472	6	1854	10	1854	20	1929	1929	0.378	0.568	0.976	1.402	2.013	0.239	0.322	0.042

STATE OF
NORTH CAROLINA
DEPT. OF TRANSPORTATION
DIVISION OF HIGHWAYS
RALEIGH, N.C.

7-06

METRIC STANDARD DRAWING FOR

BRICK OPEN THROAT CATCH BASIN

300mm THRU 1200mm PIPE

SHEET 1 OF 2
840.05