STATE OF
NORTH CAROLINA
DEPT. OF TRANSPORTATION
DIVISION OF HIGHWAYS
RALEIGH, N.C.

7-06

METRIC STANDARD DRAWING FOR

FRAMES AND WIDE SLOT FLAT GRATES

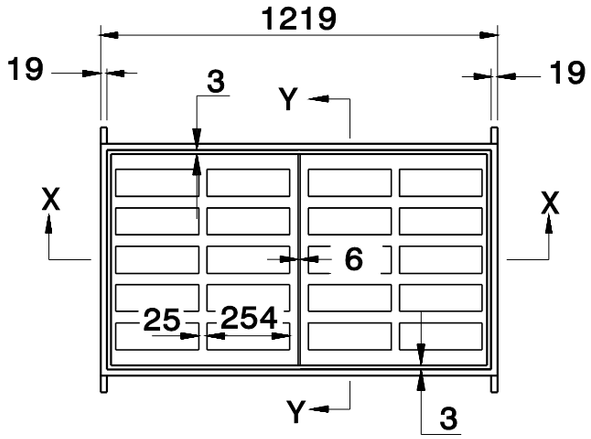

PLAN

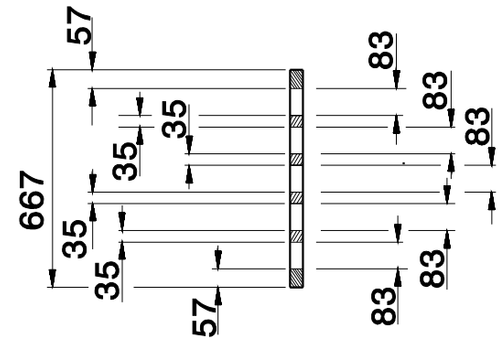

GRATE SECTION Y-Y

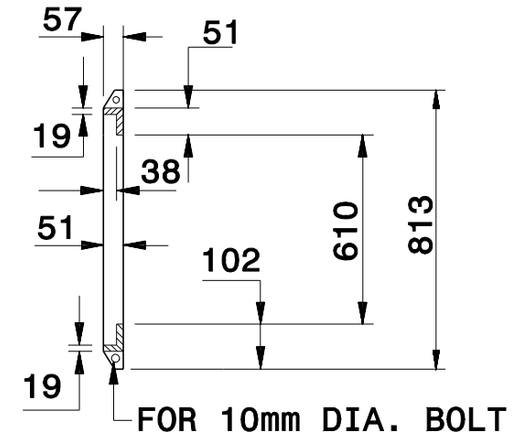

FRAME SECTION Y-Y

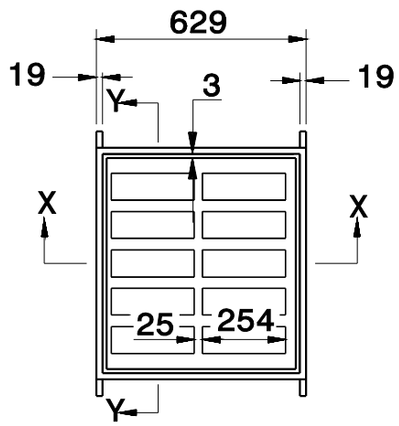

PLAN

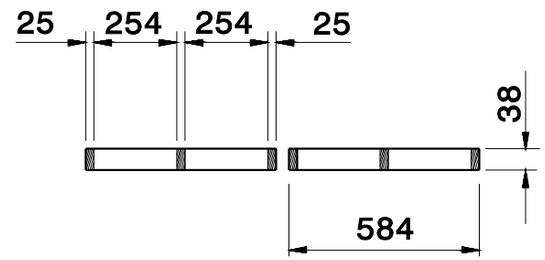

GRATE SECTION X-X

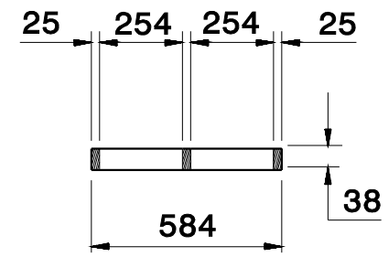

GRATE SECTION X-X

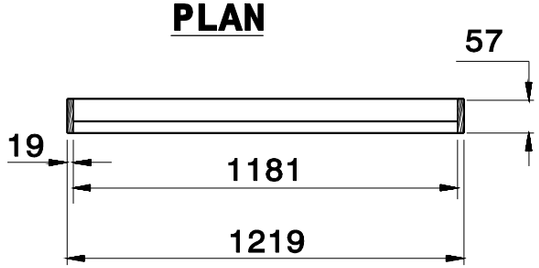

FRAME SECTION X-X

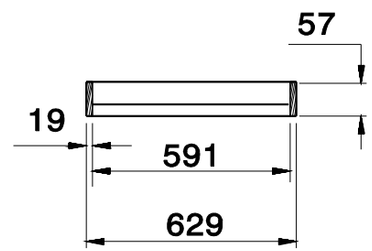

FRAME SECTION X-X

Note:
This drawing is dimensioned in millimeters unless otherwise depicted within the drawing.

SEE STANDARD DRAWING 840.25 FOR FRAME ANCHORAGE.

SHEET 1 OF 1

840.20

STATE OF
NORTH CAROLINA
DEPT. OF TRANSPORTATION
DIVISION OF HIGHWAYS
RALEIGH, N.C.

7-06

METRIC STANDARD DRAWING FOR

FRAMES AND WIDE SLOT FLAT GRATES

SHEET 1 OF 1

840.20