STATE OF
NORTH CAROLINA
DEPT. OF TRANSPORTATION
DIVISION OF HIGHWAYS
RALEIGH, N.C.

7-06

METRIC STANDARD DRAWING FOR
CONCRETE JUNCTION BOX
(WITH OPTIONAL MANHOLE)
300mm THRU 1650mm PIPE

SHEET 1 OF 1

840.31

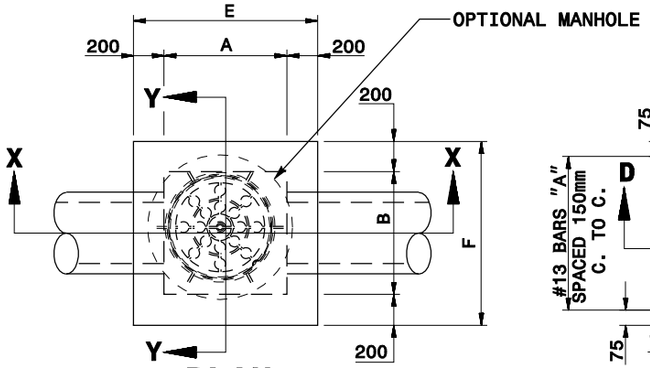

PLAN

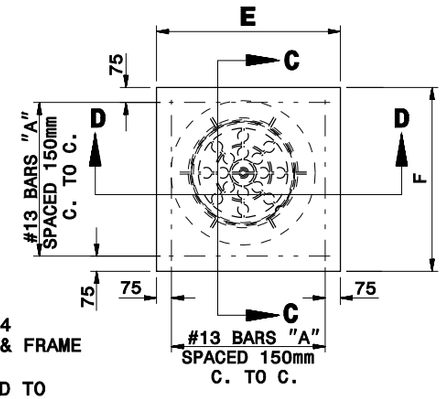

GENERAL NOTES:

CHAMFER ALL EXPOSED CORNERS 25mm.

USE CLASS "B" CONCRETE THROUGHOUT.

OPTIONAL CONSTRUCTION - MONOLITHIC POUR, 50mm KEYWAY, OR #13 BAR DOWELS AT 300mm CENTERS AS DIRECTED BY THE ENGINEER.

USE FORMS TO CONSTRUCT THE BASE SLAB.

IF REINFORCED CONCRETE PIPE IS SET IN BASE SLAB OF BOX, ADD TO BASE AS SHOWN ON STD. DWG. 840.00.

PROVIDE ALL JUNCTION BOXES OVER 1.0m IN DEPTH WITH STEPS 300mm ON CENTERS IN ACCORDANCE WITH STD. DWG. 840.66.

ADJUST THE STEEL, CONCRETE AND BRICK MASONRY QUANTITIES TO INCLUDE THE ADDITION OF THE MANHOLE (I.E. DIAGONAL BARS SHORTENED AROUND OPENING IN TOP SLAB, ADDITIONAL VARIABLE HEIGHT BRICK MASONRY, OPENING IN TOP SLAB.)

MAX. DEPTH OF THIS STRUCTURE FROM TOP OF BOTTOM SLAB TO TOP ELEVATION IS 3.6 METERS.

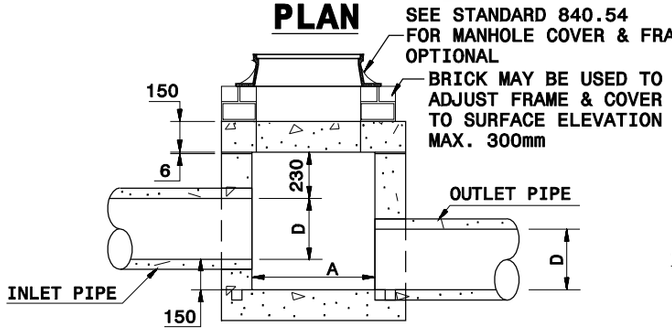

SECTION X-X

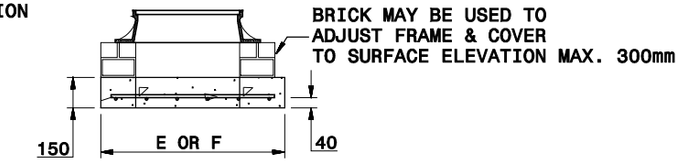

SECTION
C-C OR D-D

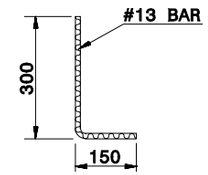

DOWEL

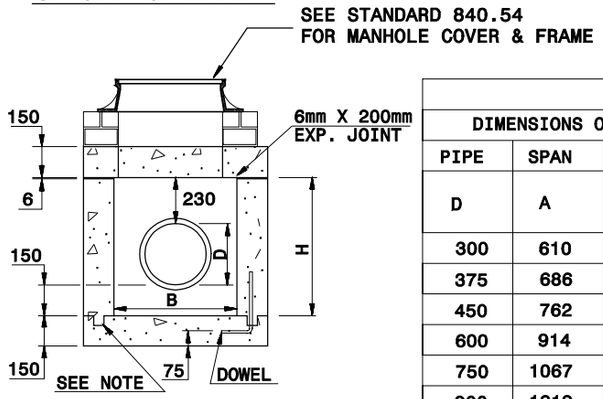

SECTION Y-Y

Note:
This drawing is dimensioned in millimeters unless otherwise depicted within the drawing.

DIMENSIONS AND QUANTITIES FOR CONCRETE JUNCTION BOXES

DIMENSIONS OF BOX AND PIPE				REINFORCEMENT BARS "A"		COVER DIMENSIONS		CUBIC METERS IN BOX			TOTAL QUANTITIES BOX AND COVER		DEDUCTIONS FOR ONE PIPE $m.^3$	
PIPE	SPAN	WIDTH	HEIGHT											
D	A	B	H	NO.	LENGTH	E	F	COVER	FLOOR	WALL/ m. OF H.	kg. REINF	m^3. MIN. "H"	C.S.	R.C.
300	610	610	686	12	838	914	914	0.127	0.127	0.464	10	0.573	0.011	0.018
375	686	686	762	12	914	991	991	0.149	0.149	0.512	11	0.689	0.017	0.027
450	762	762	838	14	991	1067	1067	0.173	0.173	0.557	14	0.814	0.025	0.037
600	914	914	991	16	1143	1219	1219	0.226	0.226	0.650	18	1.096	0.045	0.065
750	1067	1067	1143	18	1295	1372	1372	0.286	0.286	0.742	23	1.422	0.070	0.097
900	1219	1219	1295	20	1448	1524	1524	0.354	0.354	0.835	29	1.789	0.100	0.136
1050	1372	1372	1448	22	1600	1676	1676	0.428	0.428	0.928	35	2.200	0.137	0.185
1200	1624	1624	1600	26	1853	1929	1929	0.558	0.558	1.021	48	2.653	0.179	0.242
1350	1776	1776	1753	28	2005	2081	2081	0.650	0.650	1.114	56	3.147	0.227	0.306
1500	1929	1929	1905	30	2207	2284	2284	0.782	0.782	1.207	66	3.685	0.280	0.378
1650	2081	2081	2057	32	2388	2464	2464	0.911	0.911	1.299	78	4.267	0.339	0.450

STATE OF
NORTH CAROLINA
DEPT. OF TRANSPORTATION
DIVISION OF HIGHWAYS
RALEIGH, N.C.

7-06

METRIC STANDARD DRAWING FOR
CONCRETE JUNCTION BOX
(WITH OPTIONAL MANHOLE)
300mm THRU 1650mm PIPE

SHEET 1 OF 1

840.31