STATE OF
NORTH CAROLINA
DEPT. OF TRANSPORTATION
DIVISION OF HIGHWAYS
RALEIGH, N.C.

7-06

METRIC STANDARD DRAWING FOR

PRECAST DRAINAGE STRUCTURE

(SOLID AND WAFFLE WALL)

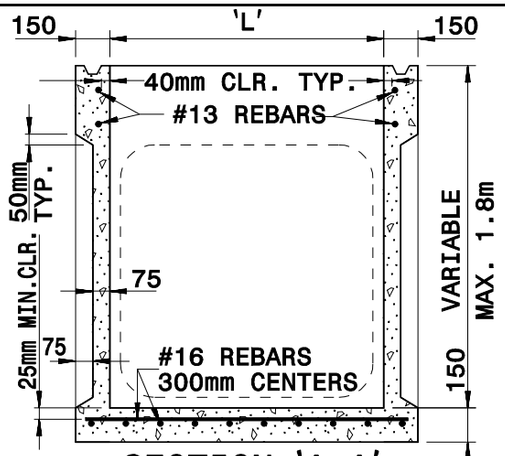

SECTION 'A-A'

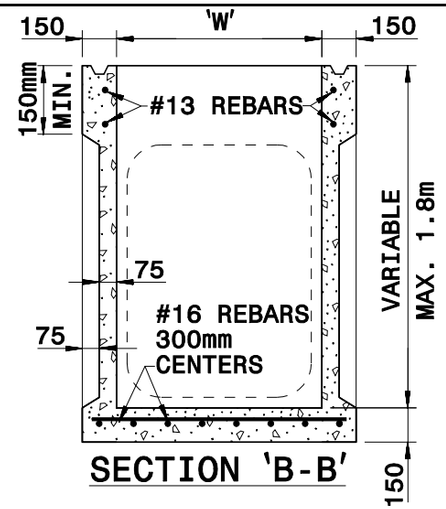

SECTION 'B-B'

THE PATTERN OF THE KNOCK-OUT PANELS ARE SHOWN FOR ILLUSTRATIVE PURPOSES ONLY.

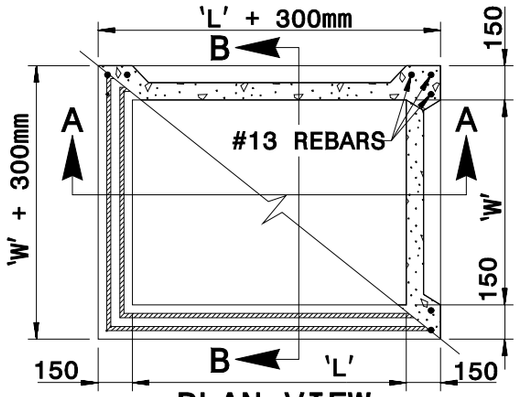

PLAN VIEW

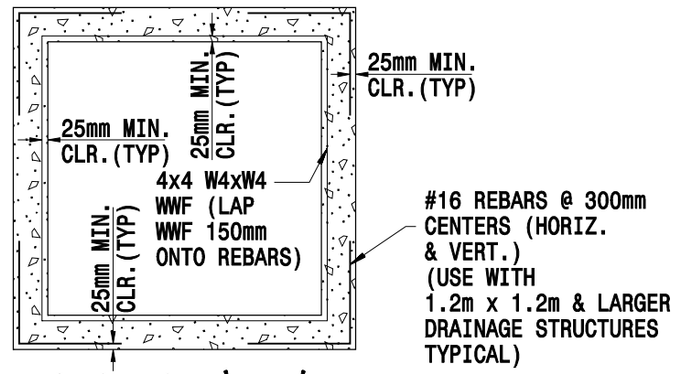

SECTION 'X-X'

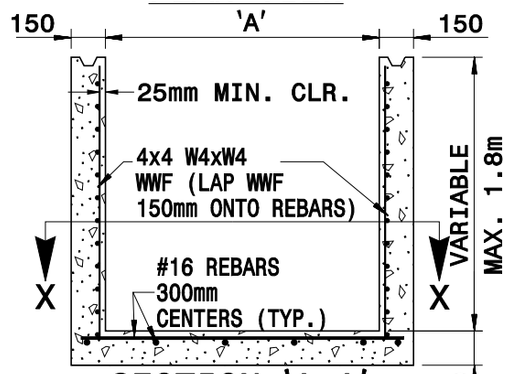

SECTION 'A-A'

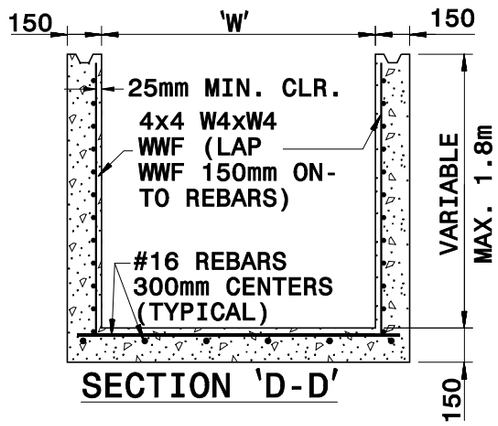

SECTION 'D-D'

Note:
This drawing is dimensioned in millimeters unless otherwise depicted within the drawing.

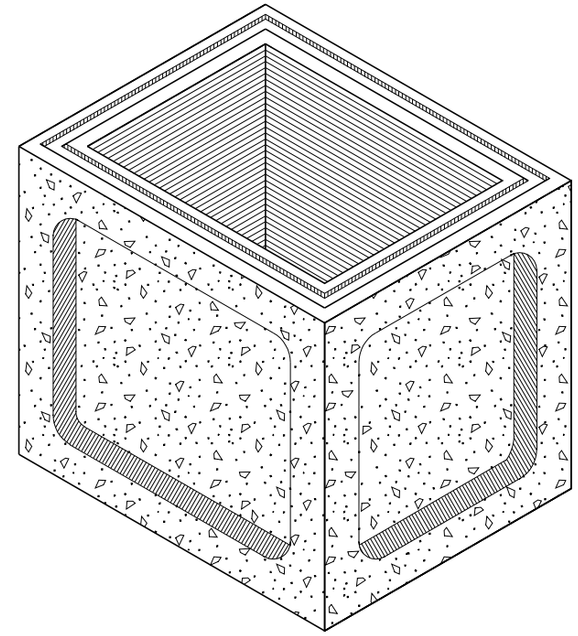

WAFFLE WALL ISOMETRIC VIEW

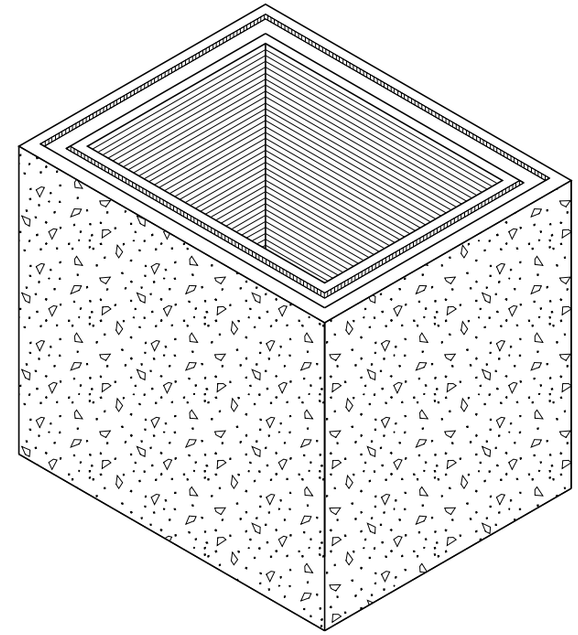

SOLID WALL ISOMETRIC VIEW

STATE OF
NORTH CAROLINA
DEPT. OF TRANSPORTATION
DIVISION OF HIGHWAYS
RALEIGH, N.C.

7-06

METRIC STANDARD DRAWING FOR

PRECAST DRAINAGE STRUCTURE

(SOLID AND WAFFLE WALL)

SHEET 1 OF 2
840.45