STATE OF
NORTH CAROLINA
DEPT. OF TRANSPORTATION
DIVISION OF HIGHWAYS
RALEIGH, N.C.

7-06

METRIC STANDARD DRAWING FOR

DRAINAGE INSTALLATION IN SHOULDER BERM GUTTER

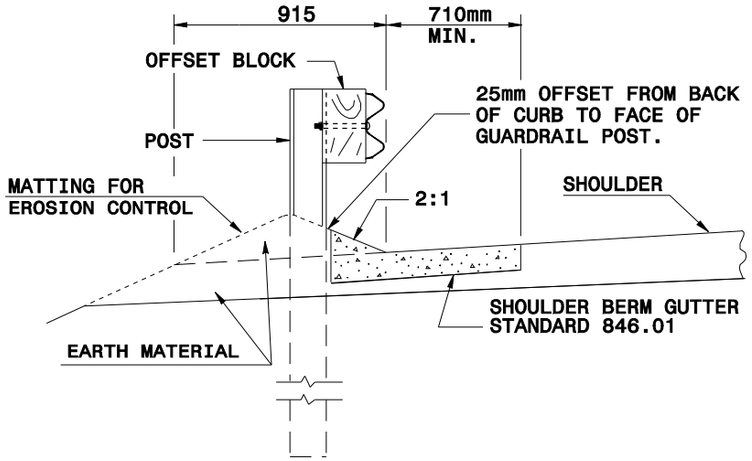

SECTION A-A

SHOULDER BERM WITH SHOULDER BERM GUTTER

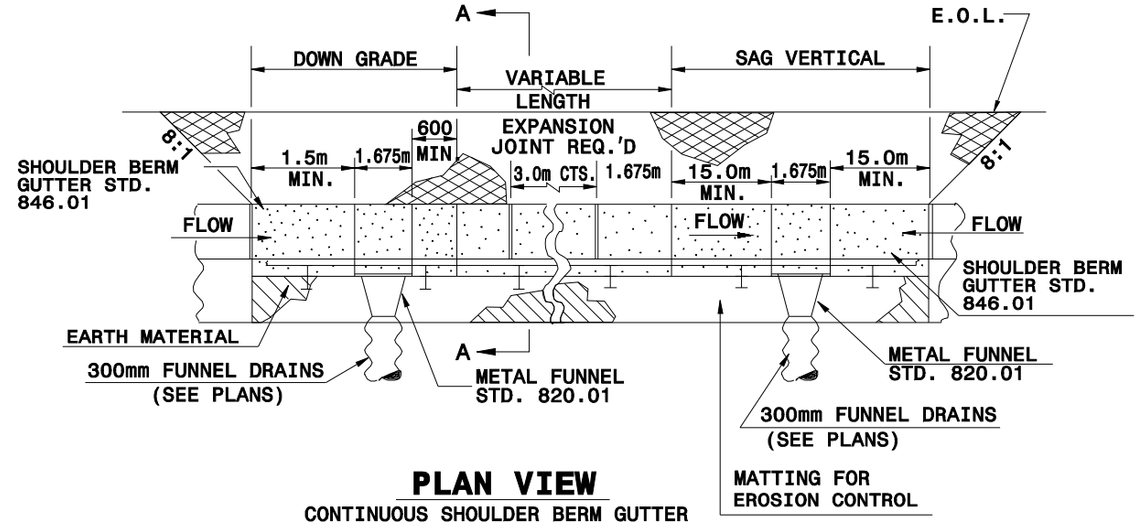

PLAN VIEW

CONTINUOUS SHOULDER BERM GUTTER

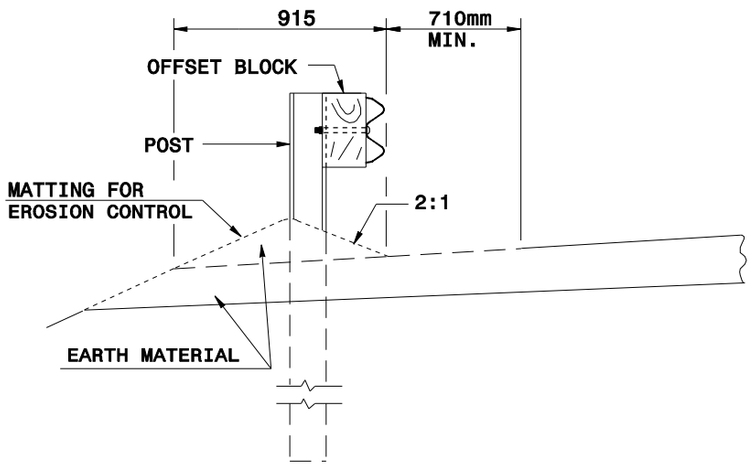

SECTION B-B

SHOULDER BERM WITH MATTING
FOR EROSION CONTROL

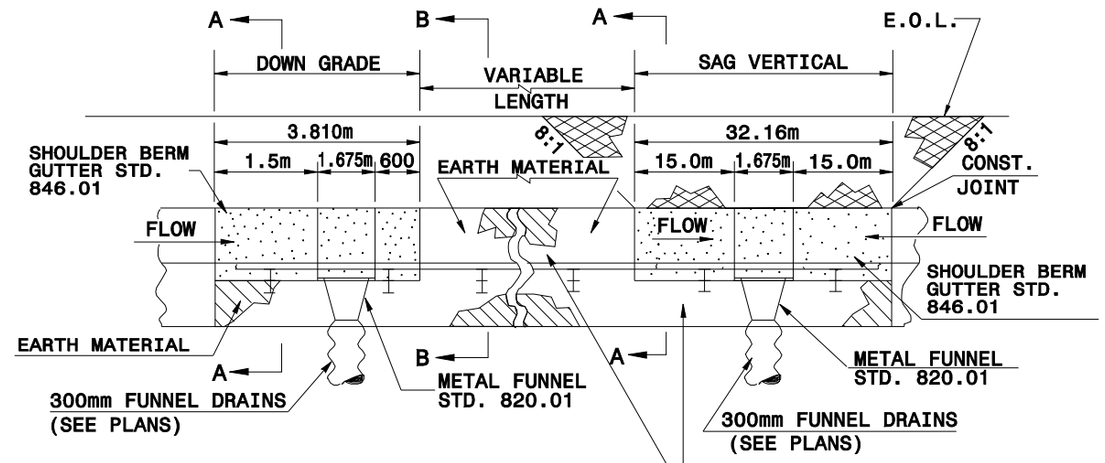

PLAN VIEW

MIN. SHOULDER BERM GUTTER

SYMBOLS

- SHOULDER BERM GUTTER
- MATTING FOR EROSION CONTROL
- PAVED SHOULDER

Note:
This drawing is dimensioned in millimeters unless otherwise depicted within the drawing.

SHOULDER BERM, SHOULDER BERM GUTTER AND FUNNEL DRAIN ADJACENT TO GUARDRAIL

SHEET 2 OF 2

846.03

STATE OF
NORTH CAROLINA
DEPT. OF TRANSPORTATION
DIVISION OF HIGHWAYS
RALEIGH, N.C.

7-06

METRIC STANDARD DRAWING FOR

DRAINAGE INSTALLATION IN SHOULDER BERM GUTTER

SHEET 2 OF 2

846.03