STATE OF NORTH CAROLINA
DEPT. OF TRANSPORTATION
DIVISION OF HIGHWAYS
RALEIGH, N.C.

7-06

METRIC STANDARD DRAWING FOR

DRAINAGE INSTALLATION IN SHOULDER BERM GUTTER

FRAME, GRATES AND DROP INLET

SHEET 1 OF 1

846.04

* CENTER DROP INLET IN THIS LOCATION.

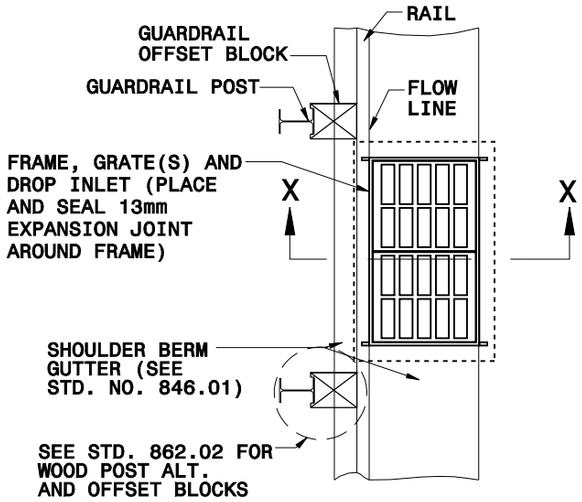

PLAN

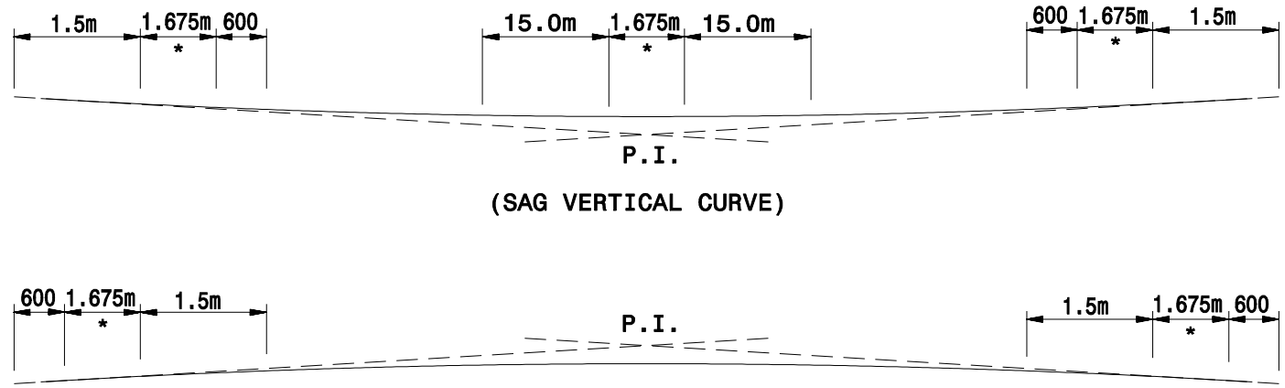

GUIDE FOR PLACING DROP INLETS IN MINIMUM LENGTHS OF SHOULDER BERM GUTTER

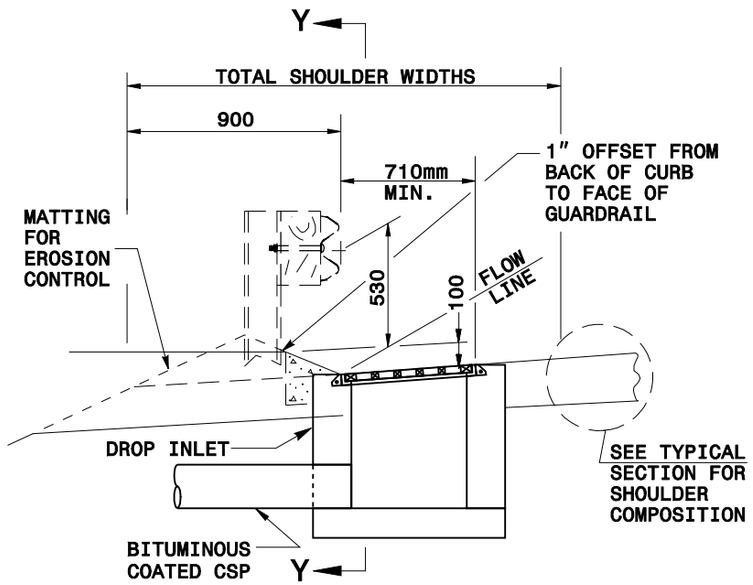

SECTION X-X

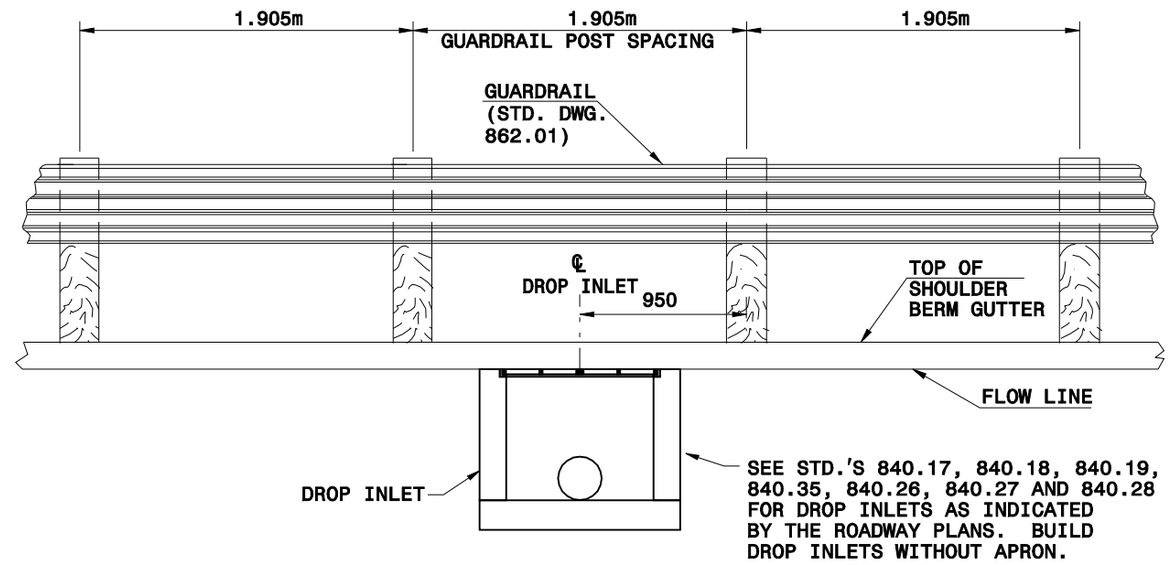

SECTION Y-Y

DROP INLET INSTALLATION IN SHOULDER BERM GUTTER

Note:
This drawing is dimensioned in millimeters unless otherwise depicted within the drawing.

STATE OF NORTH CAROLINA
DEPT. OF TRANSPORTATION
DIVISION OF HIGHWAYS
RALEIGH, N.C.

7-06

METRIC STANDARD DRAWING FOR

DRAINAGE INSTALLATION IN SHOULDER BERM GUTTER

FRAME, GRATES AND DROP INLET

SHEET 1 OF 1

846.04