STATE OF
NORTH CAROLINA
DEPT. OF TRANSPORTATION
DIVISION OF HIGHWAYS
RALEIGH, N.C.

7-06

METRIC STANDARD DRAWING FOR
GUARDRAIL INSTALLATION

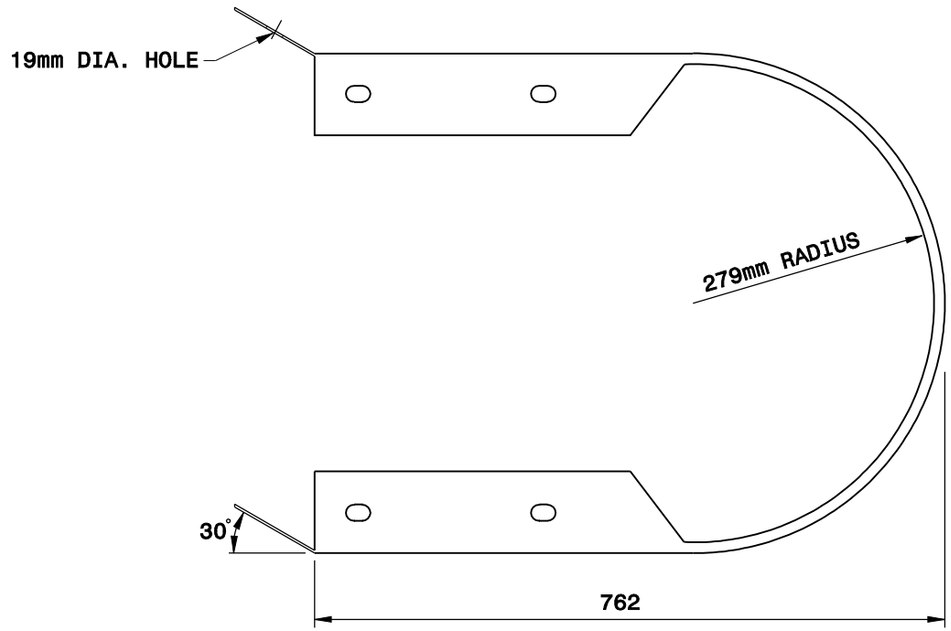

PLAN

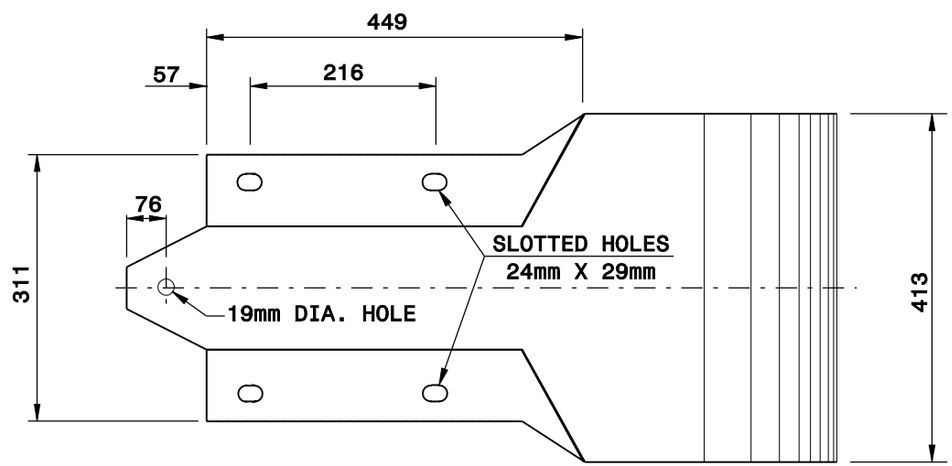

ELEVATION

BUFFERED END SECTION

Note:
This drawing is dimensioned in millimeters unless otherwise depicted within the drawing.

SHEET 7 OF 7
862.02

STATE OF
NORTH CAROLINA
DEPT. OF TRANSPORTATION
DIVISION OF HIGHWAYS
RALEIGH, N.C.

7-06

METRIC STANDARD DRAWING FOR
GUARDRAIL INSTALLATION

SHEET 7 OF 7
862.02