STATE OF
NORTH CAROLINA
DEPT. OF TRANSPORTATION
DIVISION OF HIGHWAYS
RALEIGH, N.C.

7-06

METRIC STANDARD DRAWING FOR

CABLE GUIDERAIL

ANCHOR DETAILS

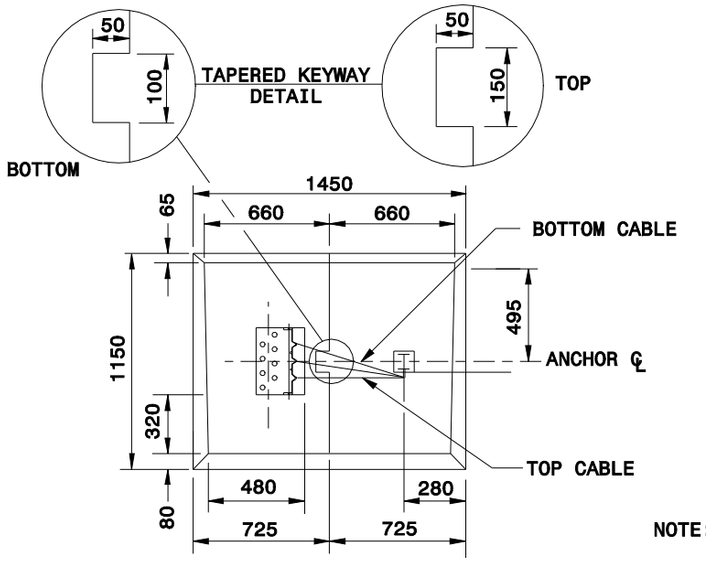

ANCHOR UNIT DETAIL
TOP VIEW LEFT HAND
(REINFORCEMENT NOT SHOWN)
TWO PIECE

NOTE: USE ONE OR TWO PIECE ANCHOR. DIMENSIONS OF TWO PIECE ANCHOR ARE SHOWN ON DRAWING. DIMENSIONS OF ONE PIECE ANCHOR ARE 1.50m LONG BY 0.90m WIDE BY 1.00m HIGH.

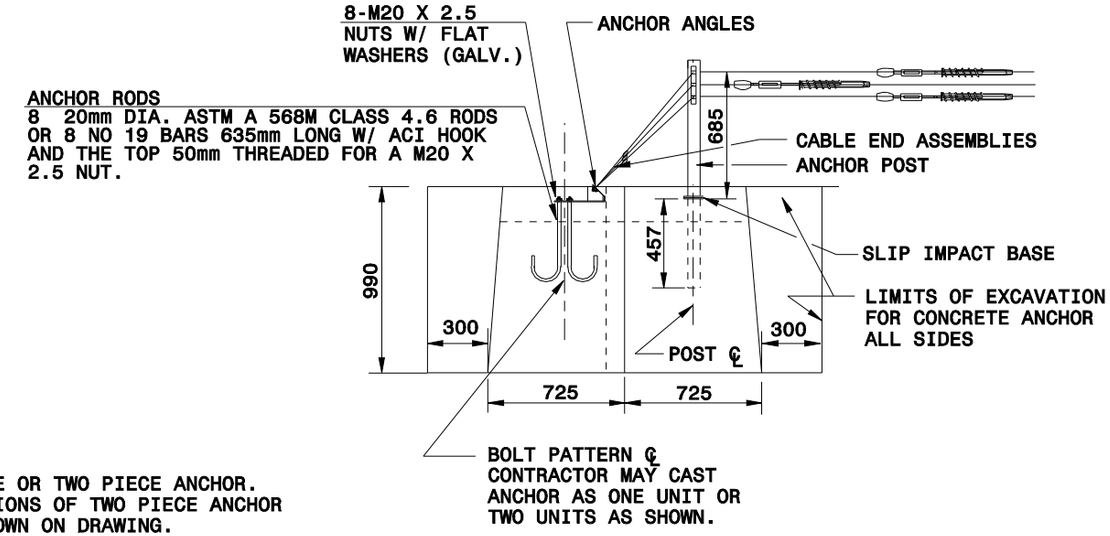

ANCHOR UNIT DETAIL
LEFT HAND
(REINFORCEMENT NOT SHOWN)

NOTE: SET THE CONCRETE ANCHOR INTO THE EXCAVATION AS DETAILED. THE BOTTOM OF THE ANCHOR MUST HAVE A FULL AND EVEN BEARING ON THE SURFACE UNDER IT SO THAT IF THE CONTRACTOR ELECTS TO PLACE THE ANCHOR IN TWO SECTIONS, THERE WILL BE LITTLE OR NO DIFFERENTIAL SETTLEMENT. IF THE CONTRACTOR ELECTS TO PLACE THE ANCHOR IN TWO SECTIONS, PLACE THE TOPS OF BOTH SECTIONS ON THE SAME PLANE. AFTER THE ANCHOR IS IN PLACE, BACKFILL THE EXCAVATION.

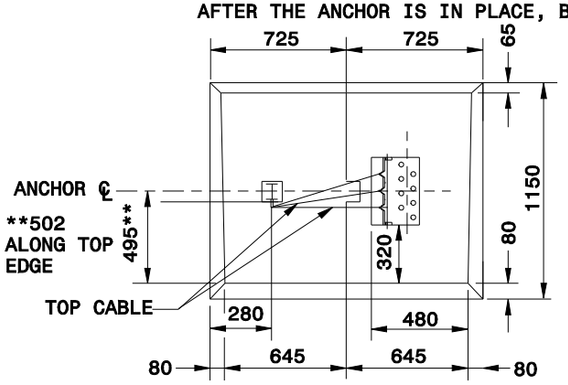

ANCHOR UNIT DETAIL
TOP VIEW RIGHT HAND
(REINFORCEMENT NOT SHOWN)
TWO PIECE

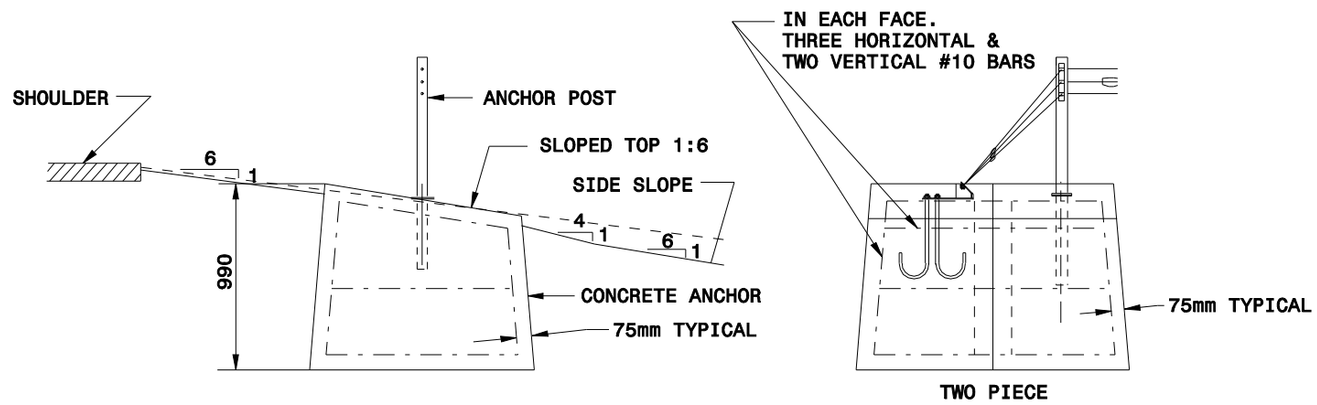

ANCHOR UNIT & RE-BAR INSTALLATION DETAIL

Note:
This drawing is dimensioned in millimeters unless otherwise depicted within the drawing.

SHEET 10 OF 12

865.01

STATE OF
NORTH CAROLINA
DEPT. OF TRANSPORTATION
DIVISION OF HIGHWAYS
RALEIGH, N.C.

7-06

METRIC STANDARD DRAWING FOR

CABLE GUIDERAIL

ANCHOR DETAILS

SHEET 10 OF 12

865.01