STATE OF
NORTH CAROLINA
DEPT. OF TRANSPORTATION
DIVISION OF HIGHWAYS
RALEIGH, N.C.

7-06

METRIC STANDARD DRAWING FOR

WOVEN WIRE FENCE

WITH WOOD POST

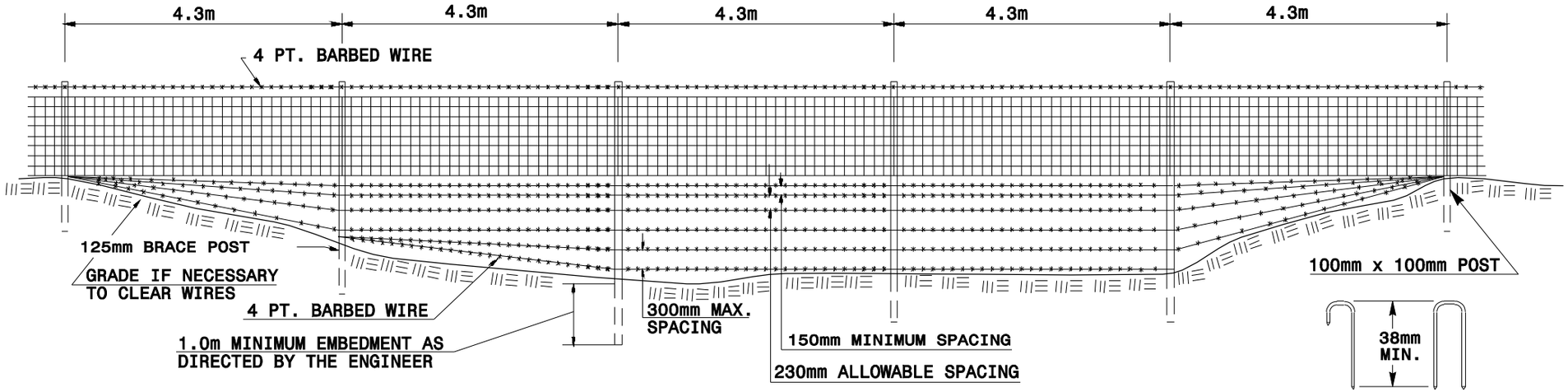

DETAIL OF DITCH CROSSING

ALTERNATE TYPES OF STAPLES

USE ONE 3.6mm STAPLE OR TWO 1.5mm STAPLES AT EACH POINT OF ATTACHMENT.

WOVEN WIRE FENCE
END OF GATE LOCATION

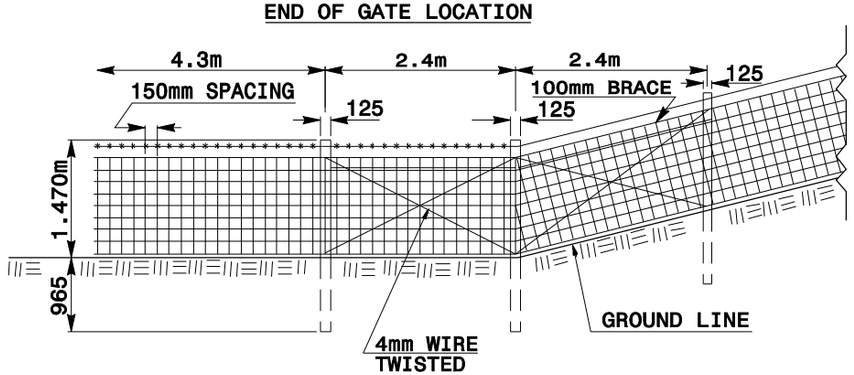

DETAIL SHOWING METHOD OF
CONSTRUCTING FENCE ON SHARP BREAK IN GRADE

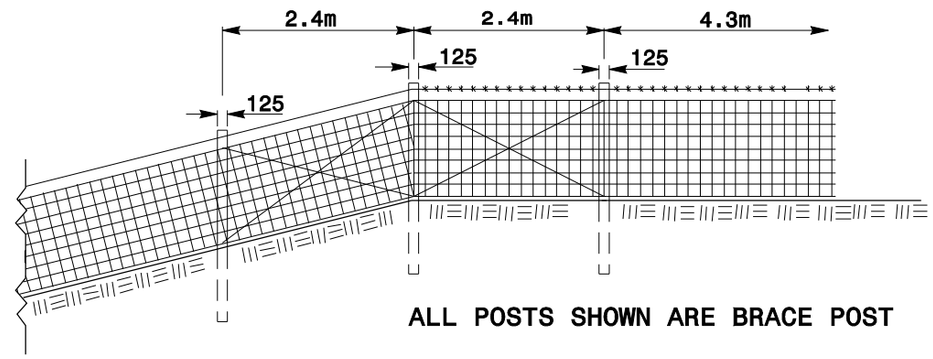

ALL POSTS SHOWN ARE BRACE POST

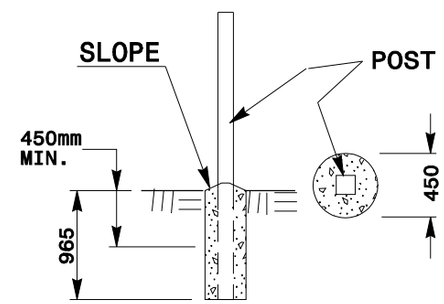

DETAIL OF POST ANCHOR

USE AT GATE POSTS OR WHERE REQUIRED BY SOIL CONDITIONS. MAY ALSO BE USED IN LIEU OF SETTING POSTS TO A DEPTH OF 1.0m.

Note:
This drawing is dimensioned in millimeters unless otherwise depicted within the drawing.

SHEET 2 OF 3

866.02

STATE OF
NORTH CAROLINA
DEPT. OF TRANSPORTATION
DIVISION OF HIGHWAYS
RALEIGH, N.C.

7-06

METRIC STANDARD DRAWING FOR
WOVEN WIRE FENCE
WITH WOOD POST

SHEET 2 OF 3

866.02