STATE OF
NORTH CAROLINA
DEPT. OF TRANSPORTATION
DIVISION OF HIGHWAYS
RALEIGH, N.C.

7-06

METRIC STANDARD DRAWING FOR
WOVEN WIRE FENCE
WITH STEEL POST

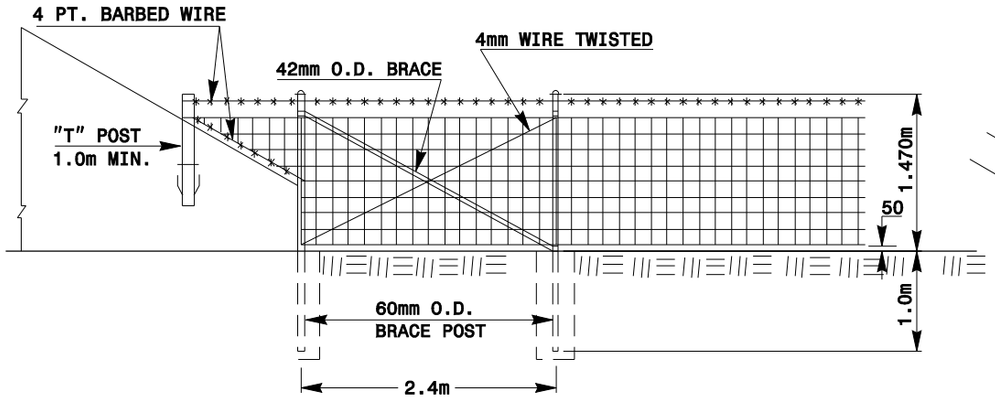

ELEVATION

METHOD OF TIEING FENCE TO HEADWALL

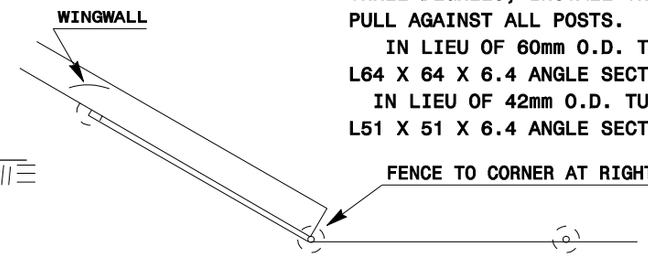

GENERAL NOTES:

INSTALL THE FENCE SHALL FACING THE PROPERTY OWNER, EXCEPT ON HORIZONTAL CURVES GREATER THAN THREE DEGREES, INSTALL THE FENCE TO PULL AGAINST ALL POSTS.

IN LIEU OF 60mm O.D. TUBULAR POSTS L64 X 64 X 6.4 ANGLE SECTIONS MAY BE USED.

IN LIEU OF 42mm O.D. TUBULAR BRACES L51 X 51 X 6.4 ANGLE SECTIONS MAY BE USED.

PLAN

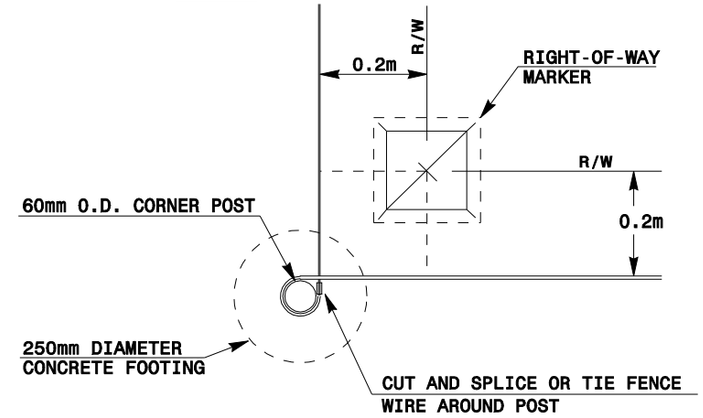

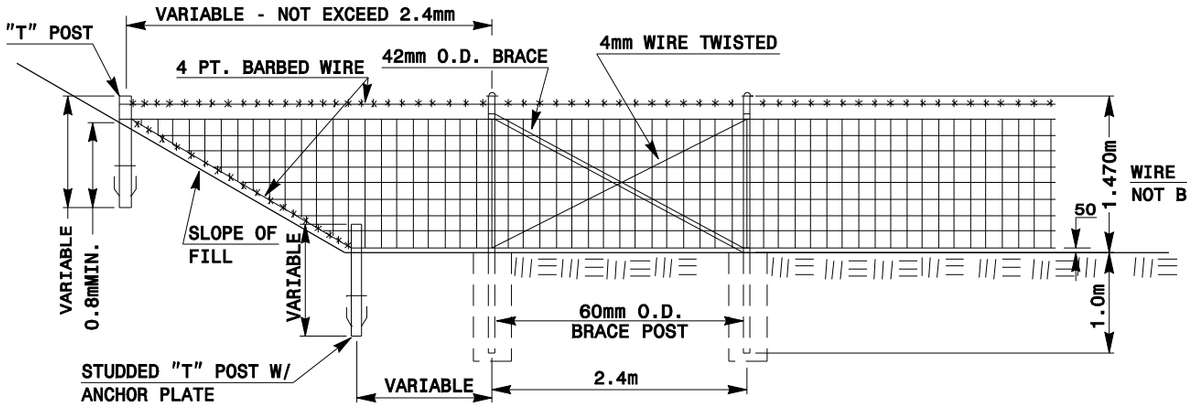

METHOD OF ERECTING FENCE FOR FILL SLOPE

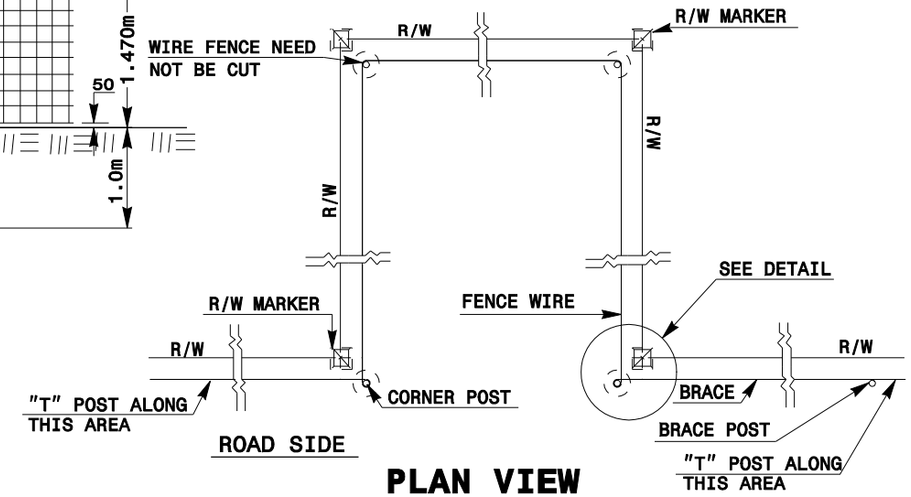

PLAN VIEW

Note:
This drawing is dimensioned in millimeters unless otherwise depicted within the drawing.

SHEET 3 OF 3

866.03

STATE OF
NORTH CAROLINA
DEPT. OF TRANSPORTATION
DIVISION OF HIGHWAYS
RALEIGH, N.C.

7-06

METRIC STANDARD DRAWING FOR
WOVEN WIRE FENCE
WITH STEEL POST

SHEET 3 OF 3

866.03