STATE OF
NORTH CAROLINA
DEPT. OF TRANSPORTATION
DIVISION OF HIGHWAYS
RALEIGH, N.C.

7-06

METRIC STANDARD DRAWING FOR
VHB TAPE CONSTRUCTION
FOR TYPE 'A' SIGNS

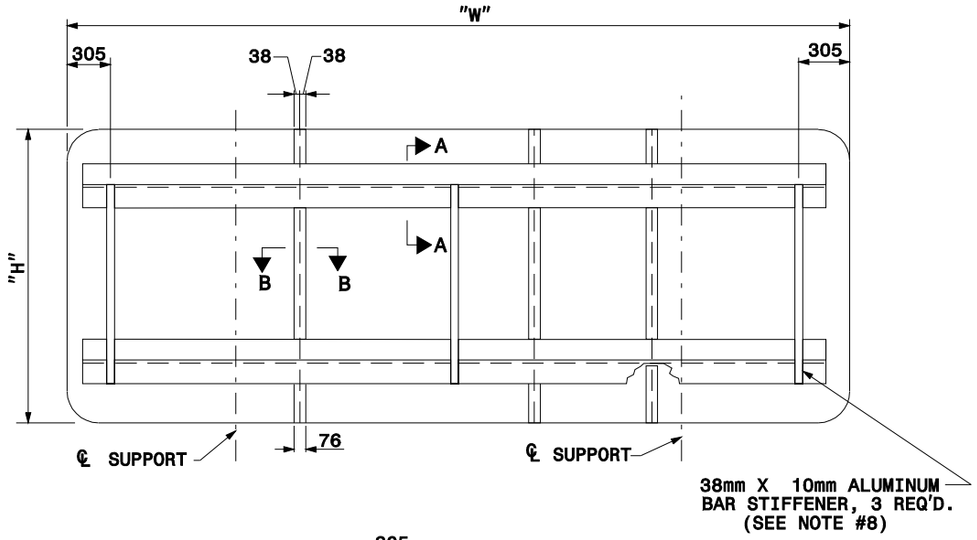

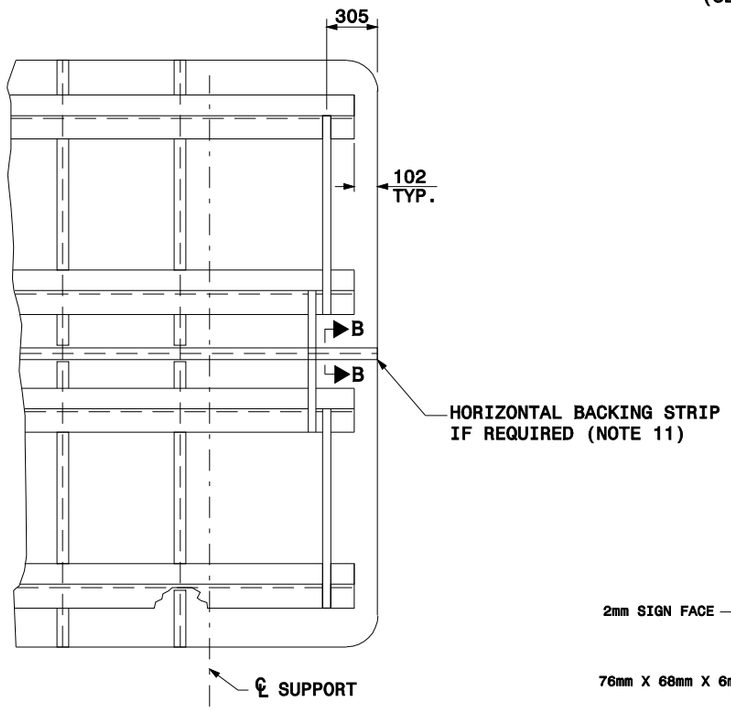

1. USE NUMBER AND SIZE OF SUPPORTS AS SHOWN ON THE SUPPORT CHART IN PROJECT PLANS.
2. FABRICATE SIGN PANEL SECTIONS WITH SHEETS 1219mm WIDE. WHEN FABRICATING SIGNS WHICH ARE NOT MULTIPLES OF 1219mm IN WIDTH, DO NOT CUT MORE THAN TWO SHEETS TO LESS THAN 1219mm IN WIDTH. THESE PANELS SHALL NOT BE LESS THAN 305mm IN WIDTH.
3. SEE NCDOT STANDARD SPECIFICATIONS FOR ROADS AND STRUCTURES FOR TYPE OF MATERIAL TO BE USED FOR SIGN PANELS, HANGER ASSEMBLIES, AND SUPPORTS.
4. USE GALVANIZED STEEL BACKING PLATES AND MOUNTING BOLTS.
5. SEE STANDARD DETAILS FOR TYPE "B" SIGNS WHEN TYPE "B" SECONDARY SIGN MOUNTING IS REQUIRED.
6. USE THE SAME DETAILS FOR TYPE "A" SECONDARY SIGNS SHALL BE THE SAME AS FOR TYPE "A" SIGNS.
7. THE VERTICAL DIMENSION BETWEEN PRIMARY AND SECONDARY SIGNS IS FIFTY (50) MILLIMETERS.
8. ADJUST STIFFENERS TO AVOID CONFLICT WITH SUPPORTS.
9. FABRICATE EACH SIGN WITH AN APPROVED VHB ACRYLIC TAPE WITH FULL FACE CONTACT BETWEEN "Z" BARS AND SIGN PANELS AND BETWEEN SPLICE PLATES AND SIGN PANELS.
10. SEE ROADWAY STANDARD 901.70 FOR SUPPORT AND "Z" BAR SPACING.
11. FABRICATE SIGNS TALLER THAN 3600mm AS TWO SEPARATE SIGNS WITH A HORIZONTAL SPLICE. LOCATE STRINGERS ON EACH SECTION OF THE SIGN BY THE SIGN STRINGER CHART (SEE ROADWAY STANDARD 901.70).
12. FABRICATE SIGNS TALLER THAN 3600mm BUT SHORTER THAN 4300mm WITH A HORIZONTAL SPLICE LOCATED 2100mm FROM BOTTOM OF SIGN.
13. FABRICATE SIGNS TALLER THAN 4300mm WITH A HORIZONTAL SPLICE LOCATED AT LEAST HALF THE SIGN HEIGHT FROM THE BOTTOM WITH THE TOP HALF AT LEAST 2100mm HIGH.
14. SEE ROADWAY STANDARD 901.80 FOR DEATILS SHOWING SIGN MOUNTING TO SUPPORTS.

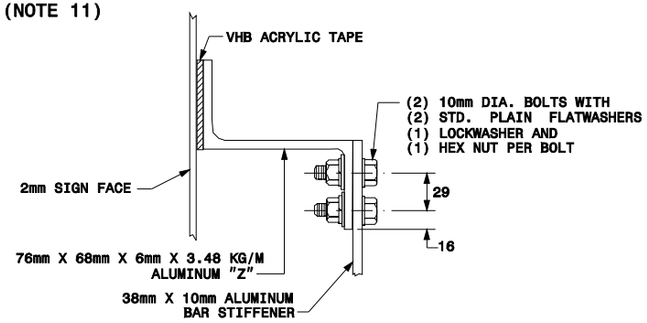

SECTION A-A

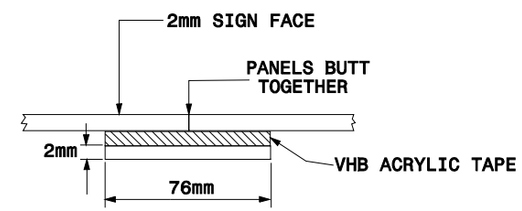

SECTION B-B

Note:
This drawing is dimensioned in millimeters unless otherwise depicted within the drawing.

SHEET 1 OF 1
901.30

STATE OF
NORTH CAROLINA
DEPT. OF TRANSPORTATION
DIVISION OF HIGHWAYS
RALEIGH, N.C.

7-06

METRIC STANDARD DRAWING FOR
VHB TAPE CONSTRUCTION
FOR TYPE 'A' SIGNS

SHEET 1 OF 1
901.30