STATE OF
NORTH CAROLINA
DEPT. OF TRANSPORTATION
DIVISION OF HIGHWAYS
RALEIGH, N.C.

7-06

METRIC STANDARD DRAWING FOR

RIVET SPACING FOR OVERLAYED SIGNS

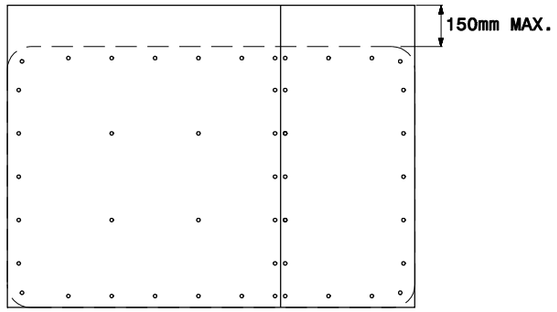

IF OVERLAYING SIGN OVERLAPS SIGN ON TOP ONLY

DETAIL NO.1

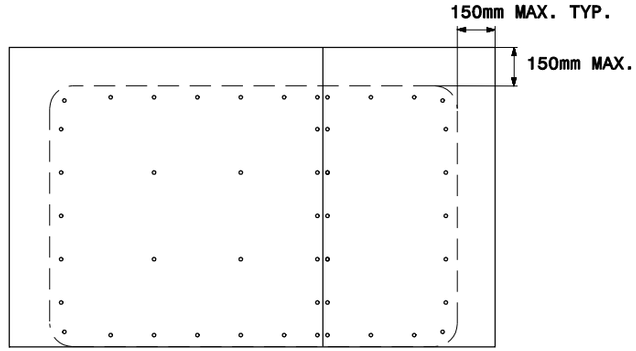

IF OVERLAYING SIGN OVERLAPS SIGN ON TOP AND SIDES

DETAIL NO.2

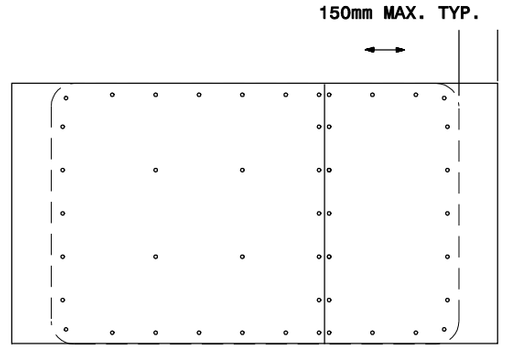

IF OVERLAYING SIGN OVERLAPS SIGN ON TWO SIDES

DETAIL NO.3

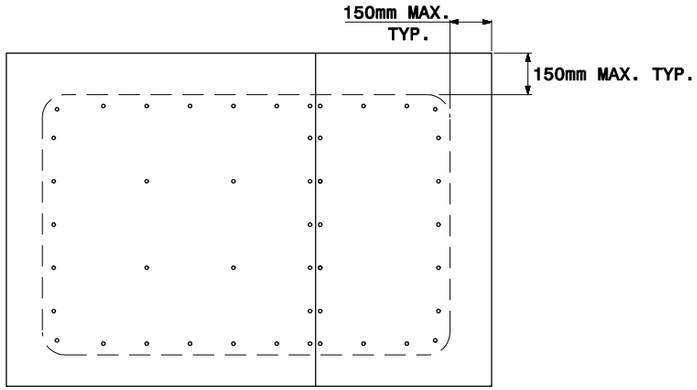

IF OVERLAYING SIGN OVERLAPS SIGN ON FOUR SIDES

DETAIL NO.4

(NOT TO BE USED ON OVERHEAD SIGNS)

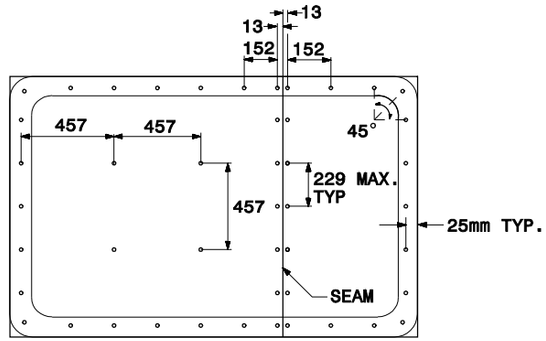

TYPICAL RIVET SPACING FOR OVERLAY SIGNS

DETAIL NO.5

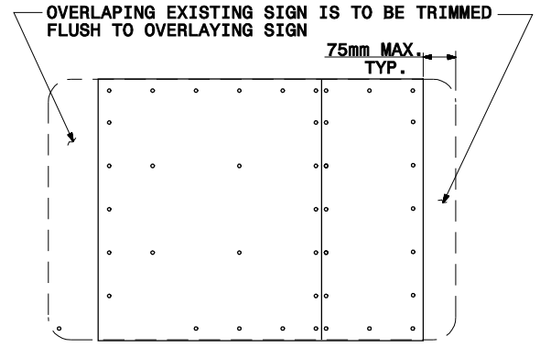

IF EXISTING SIGN OVERLAPS OVERLAYING SIGN

DETAIL NO.6

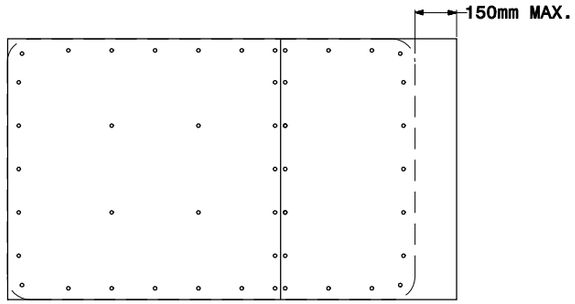

IF OVERLAYING SIGN OVERLAPS SIGN ON ONE SIDE

DETAIL NO.7

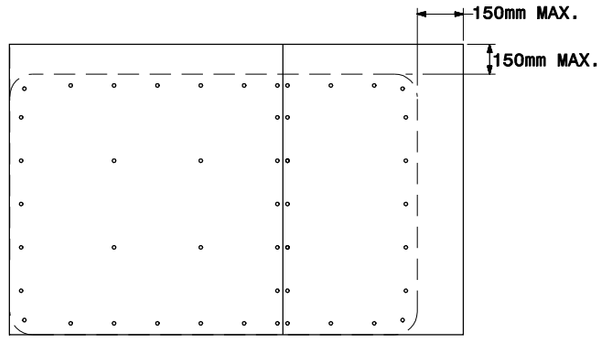

IF OVERLAYING SIGN OVERLAPS SIGN ON TOP AND ONE SIDE

DETAIL NO.8

Note:
This drawing is dimensioned in millimeters unless otherwise depicted within the drawing.

SHEET 1 OF 1

901.60

STATE OF
NORTH CAROLINA
DEPT. OF TRANSPORTATION
DIVISION OF HIGHWAYS
RALEIGH, N.C.

7-06

METRIC STANDARD DRAWING FOR

RIVET SPACING FOR OVERLAYED SIGNS

SHEET 1 OF 1

901.60