STATE OF
NORTH CAROLINA
DEPT. OF TRANSPORTATION
DIVISION OF HIGHWAYS
RALEIGH, N.C.

7-06

METRIC STANDARD DRAWING FOR

LIGHTING SYSTEM FOR OVERHEAD

SIGN ASSEMBLIES

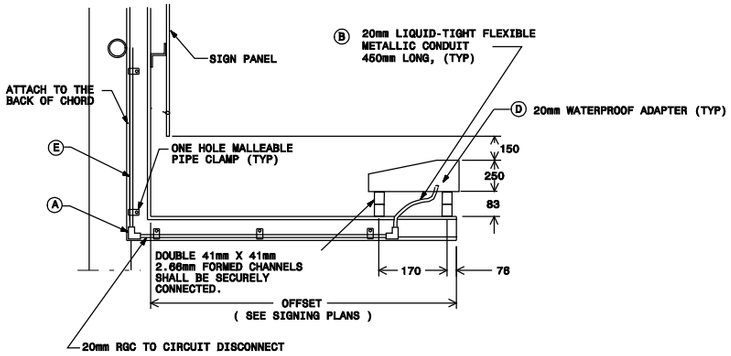

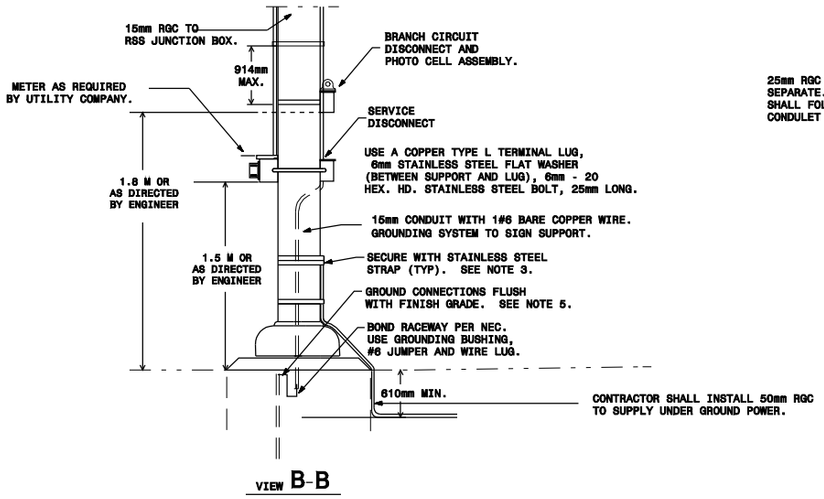

VIEW B-B

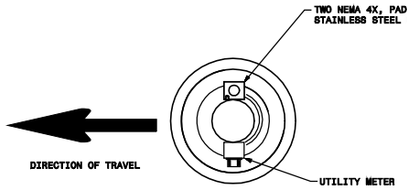

VIEW A-A

Note:
This drawing is dimensioned in millimeters unless otherwise depicted within the drawing.

NOTES:

1. SUBMIT TO THE N.C.D.O.T. FOR APPROVAL, DETAIL DRAWINGS OF LUMINAIRE RETRIEVAL SYSTEM MOUNTING ON OHS ASSEMBLY.
2. CAULK ALL ENDS OF CONDUIT UNDERGROUND WITH A CAULKING COMPOUND APPROVED BY THE ENGINEER.
3. USE STAINLESS STEEL MATERIAL FOR STRAPS UNLESS OTHERWISE SPECIFIED.
4. USE WATER TIGHT JUNCTION BOXES AND CONDULETS.
5. USE GROUNDING ELECTRODES SHALL BE 3 M LONG AND 16mm IN DIAMETER COPPER CLAD STEEL RODS DRIVEN A MINIMUM DEPTH OF 0.9 M INTO UNDISTURBED EARTH.
6. TEST GROUNDING SYSTEM USING AN APPROVED METHOD. SYSTEM SHOULD MEASURE LESS THAN TWENTY (20) OHMS. IF THE RESISTANCE MEASUREMENT IS GREATER THAN 20 OHMS, INSTALL ADDITIONAL GROUND RODS AS DIRECTED BY THE ENGINEER TO FULFILL THIS REQUIREMENT.
7. USE AN EXOTHERMIC WELDING PROCESS (CADWELD OR EQIVALENT) FOR ALL UNDERGROUND BONDING OF GROUNDING ELECTRODES AND CONDUCTORS.
8. USE UL APPROVED ASSEMBLIES AND COMPONENTS. INSTALL TO MEET NEC REQUIREMENTS AND ALL APPROVED STATE AND LOCAL CODES.

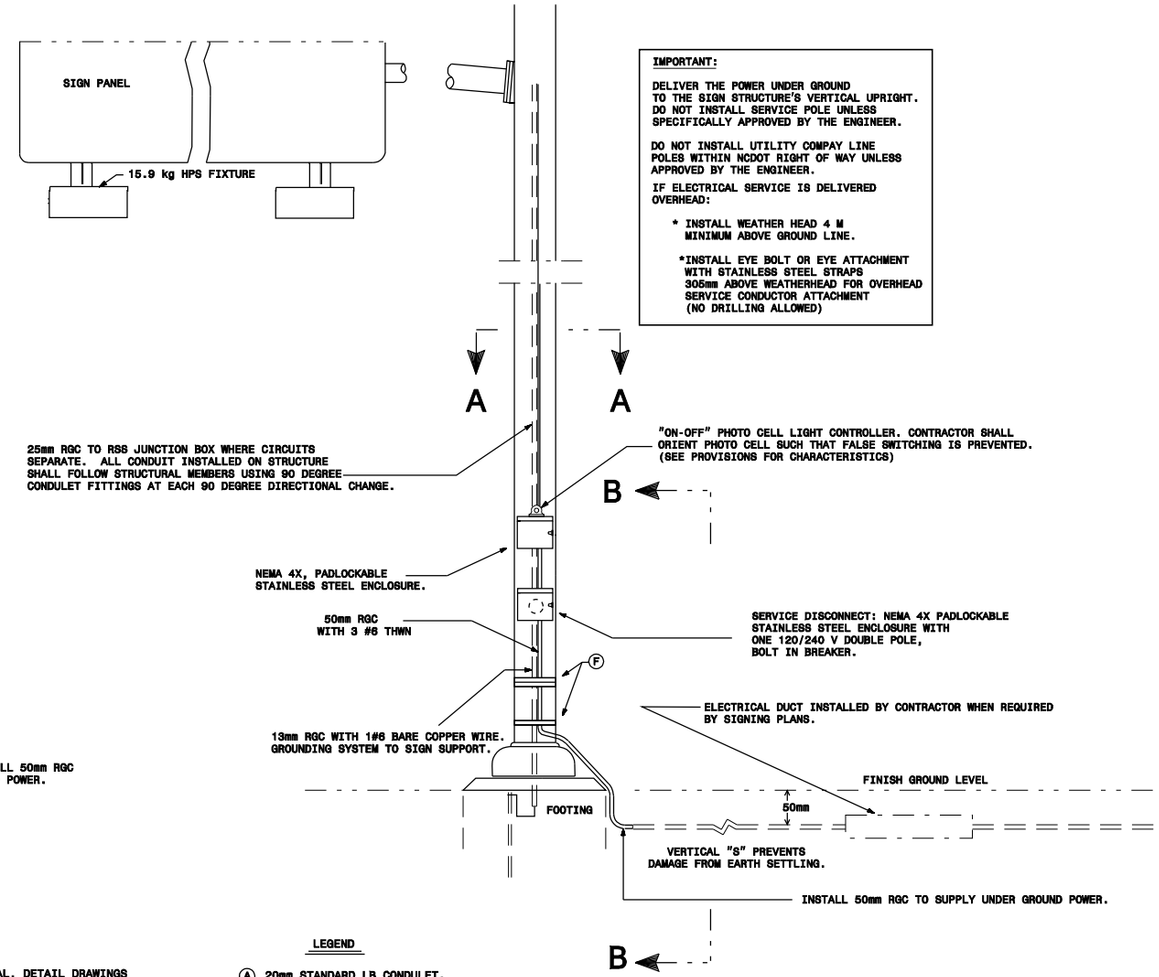

IMPORTANT:

DELIVER THE POWER UNDER GROUND TO THE SIGN STRUCTURE'S VERTICAL UPRIGHT. DO NOT INSTALL SERVICE POLE UNLESS SPECIFICALLY APPROVED BY THE ENGINEER.

DO NOT INSTALL UTILITY COMPAY LINE POLES WITHIN NCDOT RIGHT OF WAY UNLESS APPROVED BY THE ENGINEER.

IF ELECTRICAL SERVICE IS DELIVERED OVERHEAD:

* INSTALL WEATHER HEAD 4 M MINIMUM ABOVE GROUND LINE.

*INSTALL EYE BOLT OR EYE ATTACHMENT WITH STAINLESS STEEL STRAPS 305mm ABOVE WEATHERHEAD FOR OVERHEAD SERVICE CONDUCTOR ATTACHMENT (NO DRILLING ALLOWED)

LEGEND

(A) 20mm STANDARD LB CONDULET.
(B) 20mm LIQUID TIGHT FLEXIBLE METALLIC CONDUIT.
(C) 115mm X 115mm X 100mm RSS JUNCTION CONDULET.
(D) 20mm WATERPROOF ADAPTER.
(E) 20mm RGC
(F) STAINLESS STEEL STRAPS.

SHEET 1 OF 2

905.10

STATE OF
NORTH CAROLINA
DEPT. OF TRANSPORTATION
DIVISION OF HIGHWAYS
RALEIGH, N.C.

7-06

METRIC STANDARD DRAWING FOR

LIGHTING SYSTEM FOR OVERHEAD

SIGN ASSEMBLIES

SHEET 1 OF 2

905.10