STATE OF
NORTH CAROLINA
DEPT. OF TRANSPORTATION
DIVISION OF HIGHWAYS
RALEIGH, N.C.

1-08

METRIC STANDARD DRAWING FOR
HIGH MOUNT · FOUNDATION

TABLE OF FOUNDATION DIMENSIONS AND QUANTITIES 3

HEIGHT OF HIGH MOUNT M	DIAMETER "C" M	STIRRUPS		WIND VELOCITY M/S														
				40					42					58				
		SIZE	LAP-M	DEPTH "D" M	V BARS QTY	V BARS SIZE	REINF.* STEEL KG	CONCRETE CM	DEPTH "D" M	V BARS QTY	V BARS SIZE	REINF.* STEEL KG	CONCRETE CM	DEPTH "D" M	V BARS QTY	V BARS SIZE	REINF.* STEEL KG	CONCRETE CM
24	1.1	#10	0.3	3.7	8	#25	139	3.3	4	8	#25	150	3.5	4.5	8	#25	173	4.0
30	1.2	#10	0.3	4.0	8	#29	187	4.7	4.5	8	#29	216	5.4	4.9	8	#29	231	5.7
37	1.4	#10	0.3	4.5	8	#32	253	6.3	4.9	8	#32	288	7.2	5.5	8	#32	325	8.1

* INCLUDES STIRRUPS AND VERTICAL BARS (V BARS)

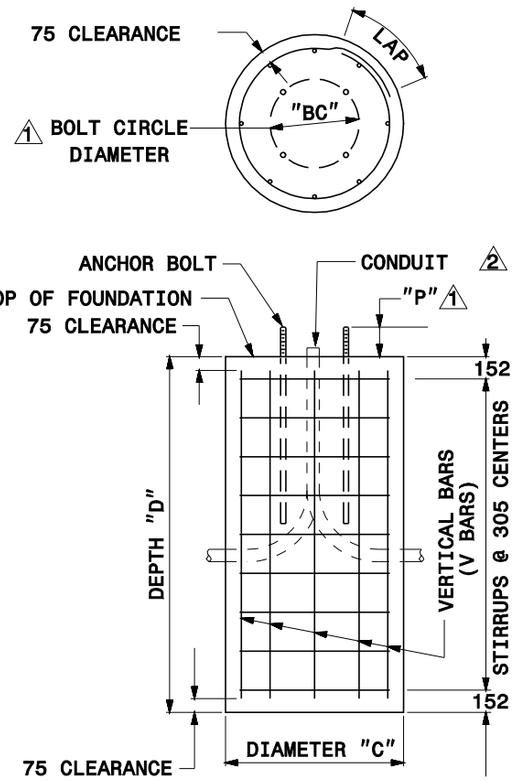

DETAIL "A"

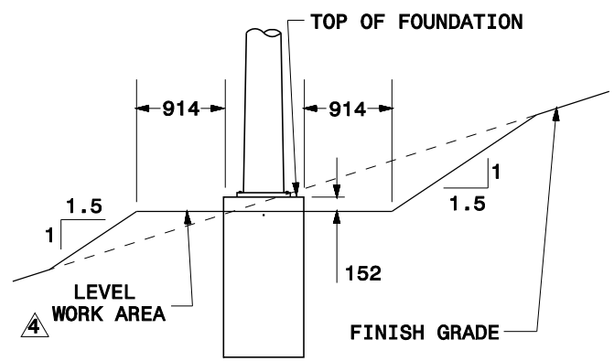

DETAIL "B"

Note:
This drawing is dimensioned in millimeters unless otherwise depicted within the drawing.

NOTES

1 ANCHOR BOLTS

CONFORM NUMBER, SIZE, AND LENGTH OF ANCHOR BOLTS, BOLT CIRCLE DIAMETER "BC", AND ANCHOR BOLT PROJECTION "P" TO APPROVED HIGH MOUNT STANDARD DRAWINGS.

2 CONDUITS

MATCH ORIENTATION, QUANTITY, TYPE, AND SIZE OF CONDUITS TO THE LAYOUT SHEETS. STUB AND CAP ONE SPARE CONDUIT AT EACH FOUNDATION. PROJECT CONDUIT A MAXIMUM OF 50MM ABOVE TOP OF FOUNDATION. PLACE CONDUIT 762MM BENEATH FINISH GRADE.

3 DIMENSIONS & QUANTITIES

DIMENSIONS AND QUANTITIES OF CONCRETE AND REINFORCING STEEL ARE GIVEN FOR THE PURPOSE OF OBTAINING BID PRICES ONLY. SEE STANDARD SPECIFICATIONS SECTION 1402, FOR OTHER STRUCTURAL REQUIREMENTS.

4 WORK AREA

PROVIDE A LEVEL WORK AREA AROUND EACH FOUNDATION. CUT/FILL SLOPES MAY BE ADJUSTED AS DIRECTED BY THE ENGINEER.

5 ELEVATION

SET TOP OF FOUNDATION AT 152MM ABOVE LEVEL WORK AREA. SEE DETAIL "B".

STATE OF
NORTH CAROLINA
DEPT. OF TRANSPORTATION
DIVISION OF HIGHWAYS
RALEIGH, N.C.

1-08

METRIC STANDARD DRAWING FOR
HIGH MOUNT · FOUNDATION

SHEET 1 OF 1
1402.01