STATE OF
NORTH CAROLINA
DEPT. OF TRANSPORTATION
DIVISION OF HIGHWAYS
RALEIGH, N.C.

7-06

METRIC STANDARD DRAWING FOR

GUIDE FOR TEMPORARY BERMS AND SLOPE DRAINS

MINIMUM 50mm SURFACE COURSE DEPTH OR CLASS "B" STONE. USE AS DIRECTED BY THE ENGINEER.

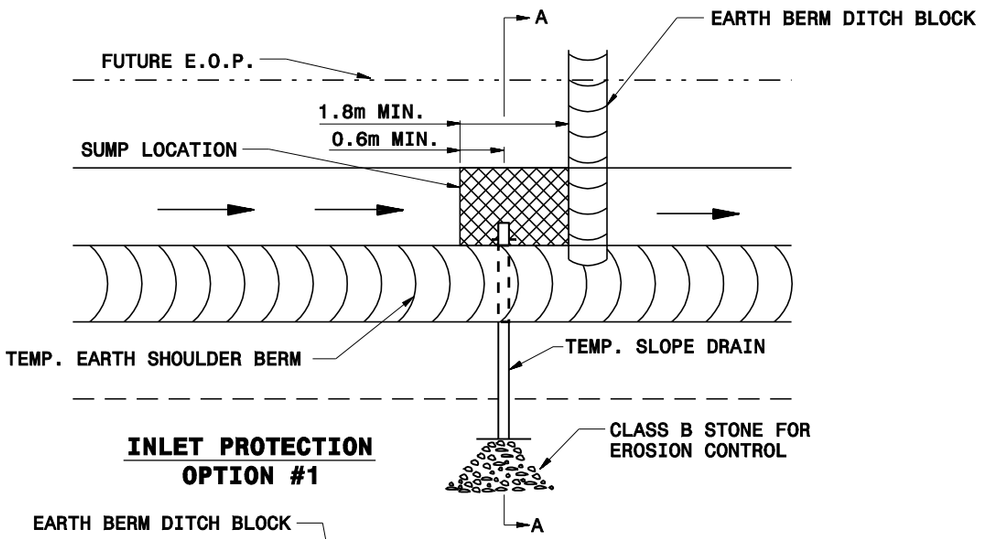

INLET PROTECTION
OPTION #1

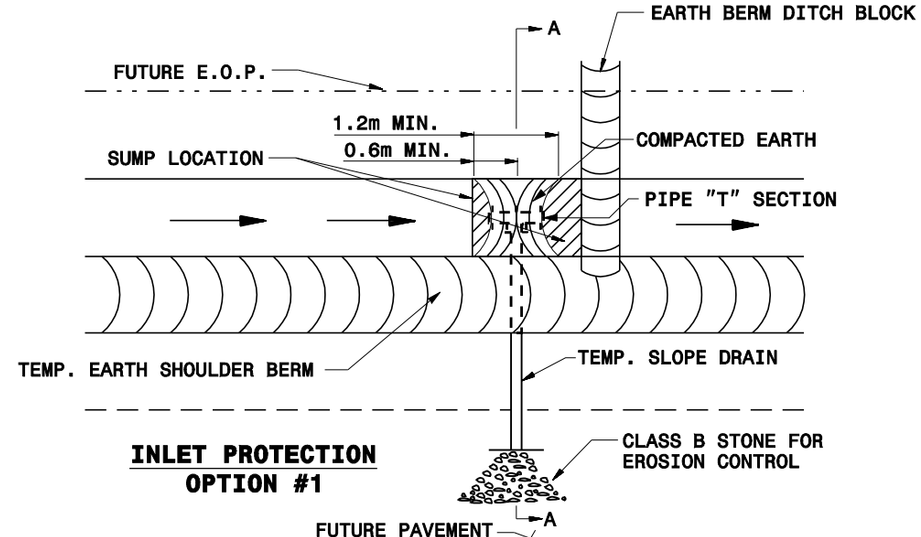

INLET PROTECTION
OPTION #1

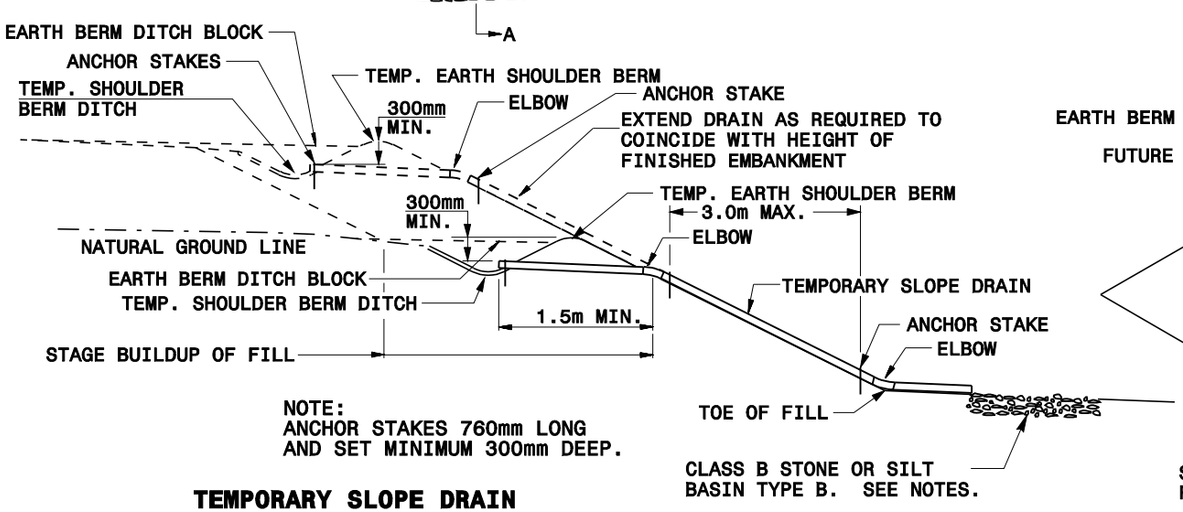

NOTE:
ANCHOR STAKES 760mm LONG AND SET MINIMUM 300mm DEEP.

TEMPORARY SLOPE DRAIN
SECTION A-A

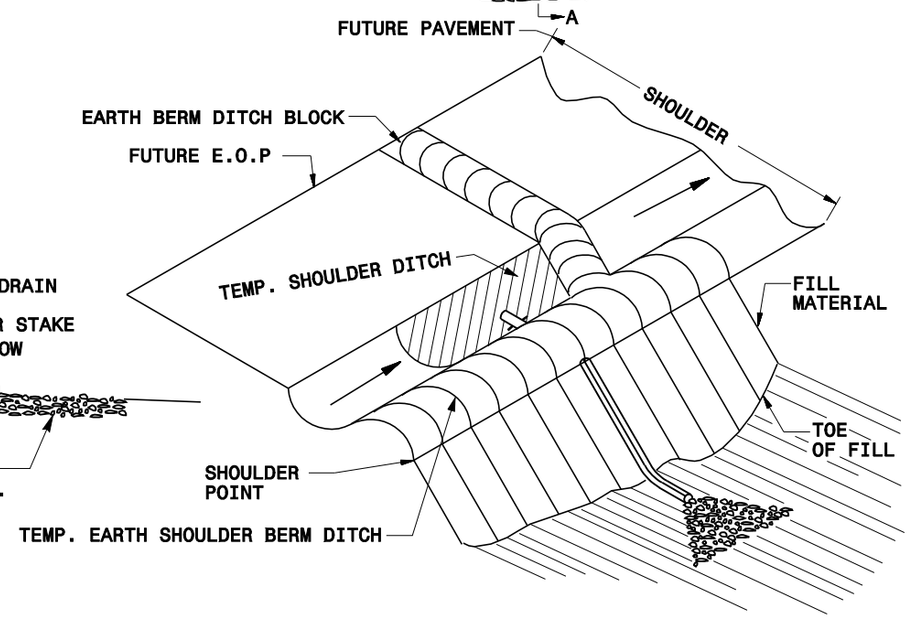

ISOMETRIC VIEW

NOTES:
1. OPEN END PIPE WITH MINIMUM SETBACK AND PROPER COMPACTION IS AN ACCEPTABLE INLET TREATMENT FOR STAGED CONSTRUCTION WHEN NOT LEFT IN PLACE FOR MORE THAN 30 DAYS.
2. WHEN A LONG DELAY IS EXPECTED BETWEEN FINAL GRADE AND PLACEMENT OR A PERMANENT DRAINAGE SYSTEM PROTECT THE INLET BY PLACING A TEE SECTION ON THE INLET AND/OR BY LINING THE INLET AREA WITH CLASS B STONE OR ASPHALT CONCRETE PLANT MIX AS DIRECTED BY THE ENGINEER.
3. PLACE THE INLET FOR SINGLE DIRECTION FLOW IN A SUMP.
4. USE CLASS B STONE FOR EROSION CONTROL AT OUTLET LOCATIONS SUBJECT TO SCOURING. SILT BASIN TYPE B MAY ALSO BE UTILIZED TO CONTAIN SEDIMENT.

Note:
This drawing is dimensioned in millimeters unless otherwise depicted within the drawing.

SHEET 1 OF 1
1622.01

STATE OF
NORTH CAROLINA
DEPT. OF TRANSPORTATION
DIVISION OF HIGHWAYS
RALEIGH, N.C.

7-06

METRIC STANDARD DRAWING FOR

GUIDE FOR TEMPORARY BERMS AND SLOPE DRAINS

SHEET 1 OF 1
1622.01