Ted Walls,

STATE OF NORTH CAROLINA
DEPARTMENT OF TRANSPORTATION

MICHAEL F. EASLEY
GOVERNOR

LYNDO TIPPETT
SECRETARY

MEMO TO: Roadway Design Project Engineers

FROM: Jay A. Bennett, PE
State Roadway Design Engineer

DATE: October 21, 2008

SUBJECT: Concrete Transitional Section for Catch Basins and Drop Inlets

Beginning with the **January 20, 2009 Letting,** two additional pay items have been added to Transport:

Concrete Transitional Section for Catch Basins – Per Each
Concrete Transitional Section for Drop Inlets – Per Each.

The Drainage Summary Sheets in the cell library have been modified to reflect the changes. Please begin using the new Drainage Summary Sheets with the January 20, 2009 Letting.

For additional information on the Concrete Transitional Section see Randy Garris's memo dated August 26, 2008 located on the Roadway webpage at:
http://ncdot.gov/doh/preconstruct/highway/roadway/policymemos/Design/concretetransition.pdf

If you have any additional question, please call Jay A. Bennett, PE at (919) 250-4016.

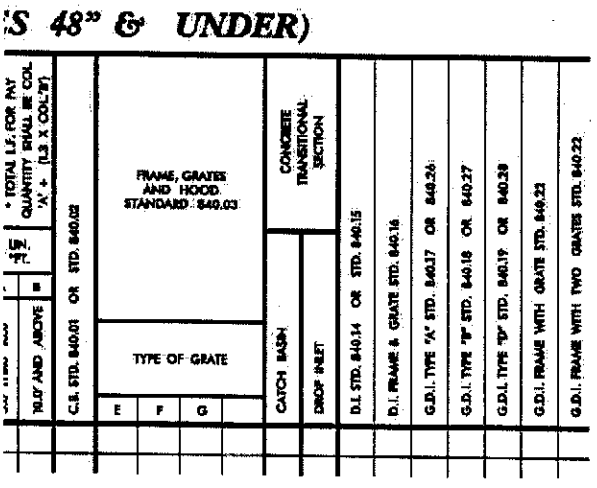

JAB/tw
Attachments
cc: Dewayne Sykes, PE
Scott Blevins, PE
Randy Garris, PE
Cynthia Perry, PE

MAILING ADDRESS:
NC DEPARTMENT OF TRANSPORTATION
ROADWAY DESIGN UNIT
1582 MAIL SERVICE CENTER
RALEIGH NC 27699-1582

TELEPHONE: 919-250-4016
FAX: 919-250-4036

WEBSITE: WWW.NCDOT.ORG/DOH

LOCATION:
CENTURY CENTER COMPLEX
BUILDING A
1000 BIRCH RIDGE DRIVE
RALEIGH NC

STATE OF
NORTH CAROLINA
DEPT. OF TRANSPORTATION
DIVISION OF HIGHWAYS
RALEIGH, N.C.

7-06

ENGLISH STANDARD DRAWING FOR

METHOD FOR PLACEMENT OF
DROP INLETS IN GRASSED MEDIAN

(USING 1'-6" CURB & GUTTER)

SHEET 1 OF 1

852.04

NOTES:
REFER TO STD. NO. 840.14 AND 840.15 FOR DRAINAGE STRUCTURE.

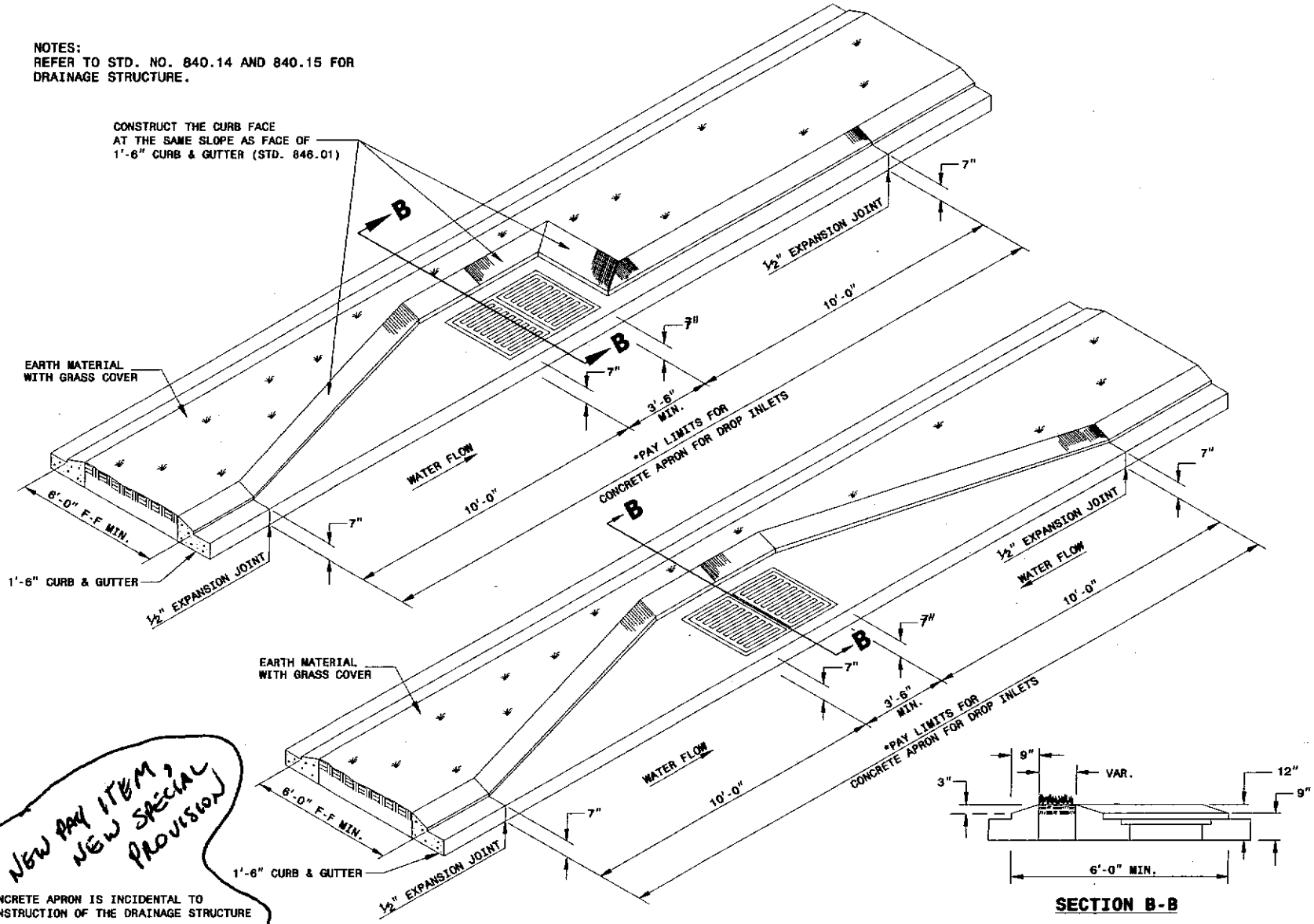

SECTION B-B

NEW PAY ITEM, NEW SPECIAL PROVISION

*CONCRETE APRON IS INCIDENTAL TO CONSTRUCTION OF THE DRAINAGE STRUCTURE

NOW: PER EACH, CONCRETE TRANSITIONAL SECTION FOR DROP INLETS

STATE OF
NORTH CAROLINA
DEPT. OF TRANSPORTATION
DIVISION OF HIGHWAYS
RALEIGH, N.C.

7-06

ENGLISH STANDARD DRAWING FOR

METHOD FOR PLACEMENT OF
DROP INLETS IN GRASSED MEDIAN

(USING 1'-6" CURB & GUTTER)

SHEET 1 OF 1

852.04

STATE OF NORTH CAROLINA
DEPT. OF TRANSPORTATION
DIVISION OF HIGHWAYS
RALEIGH, N.C.

7-06

ENGLISH STANDARD DRAWING FOR

MEDIAN CURB FOR CATCH BASIN

(FOR USE WITH 1'-6" CURB AND GUTTER)

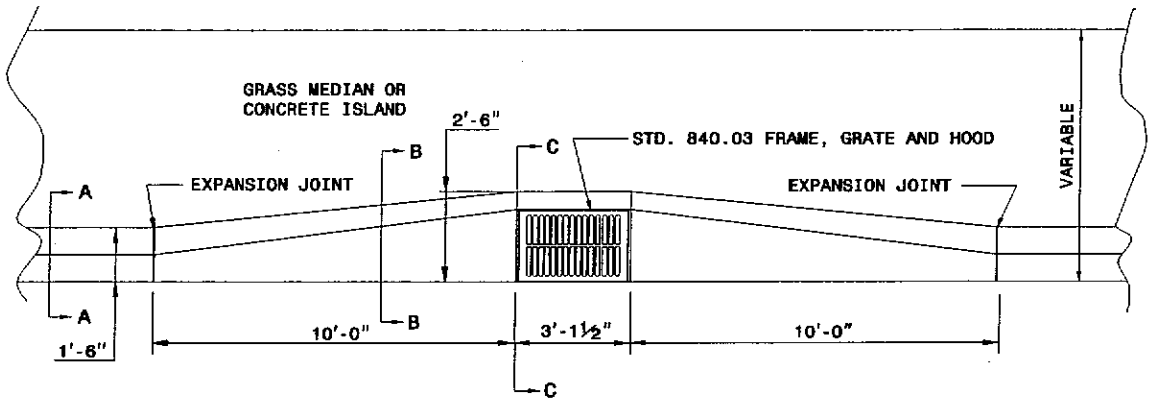

PLAN

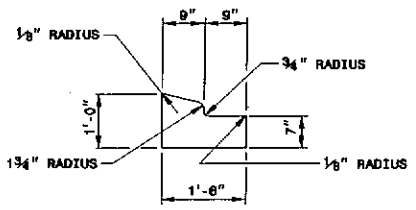

SECTION - AA

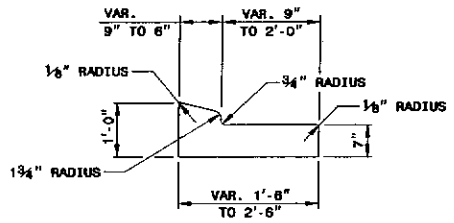

SECTION - BB

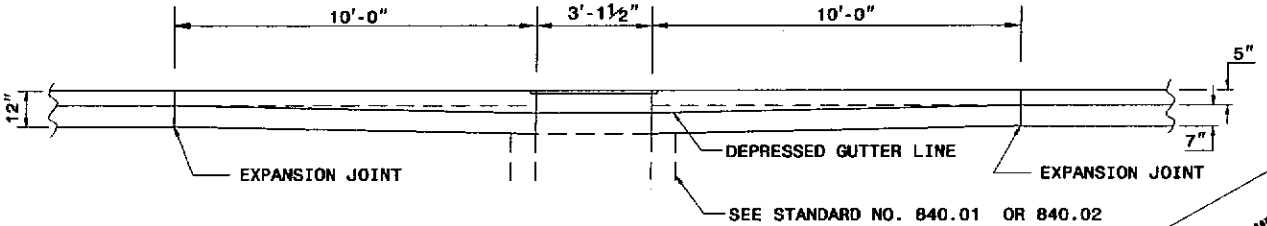

ELEVATION

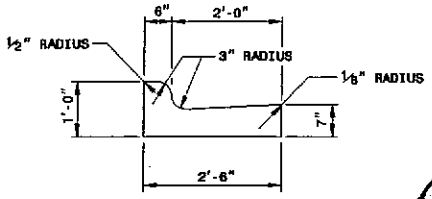

SECTION - CC

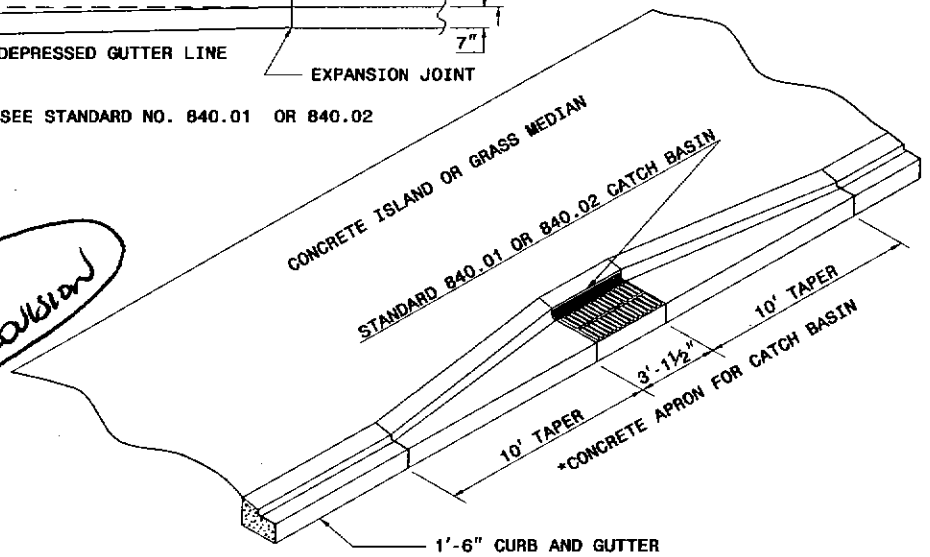

NEW PAY ITEM,
NEW SPECIAL PROVISION

*CONCRETE APRON IS INCIDENTAL TO CONSTRUCTION OF THE DRAINAGE STRUCTURE

SHEET 1 OF 1

852.05

STATE OF NORTH CAROLINA
DEPT. OF TRANSPORTATION
DIVISION OF HIGHWAYS
RALEIGH, N.C.

7-06

ENGLISH STANDARD DRAWING FOR

MEDIAN CURB FOR CATCH BASIN

(FOR USE WITH 1'-6" CURB AND GUTTER)

SHEET 1 OF 1

852.05

NOW: PER EACH, CONCRETE TRANSITIONAL SECTION FOR CATCH BASINS

STATE OF
NORTH CAROLINA
DEPT. OF TRANSPORTATION
DIVISION OF HIGHWAYS
RALEIGH, N.C.

7-06

ENGLISH STANDARD DRAWING FOR

METHOD FOR PLACEMENT OF DROP INLETS IN CONCRETE ISLANDS

SHEET 1 OF 1

852.06

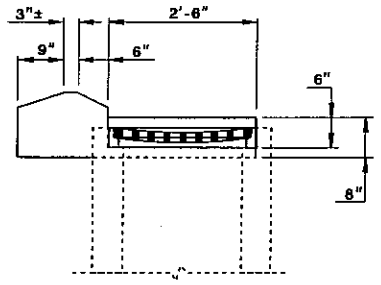

SECTION 'A-A'

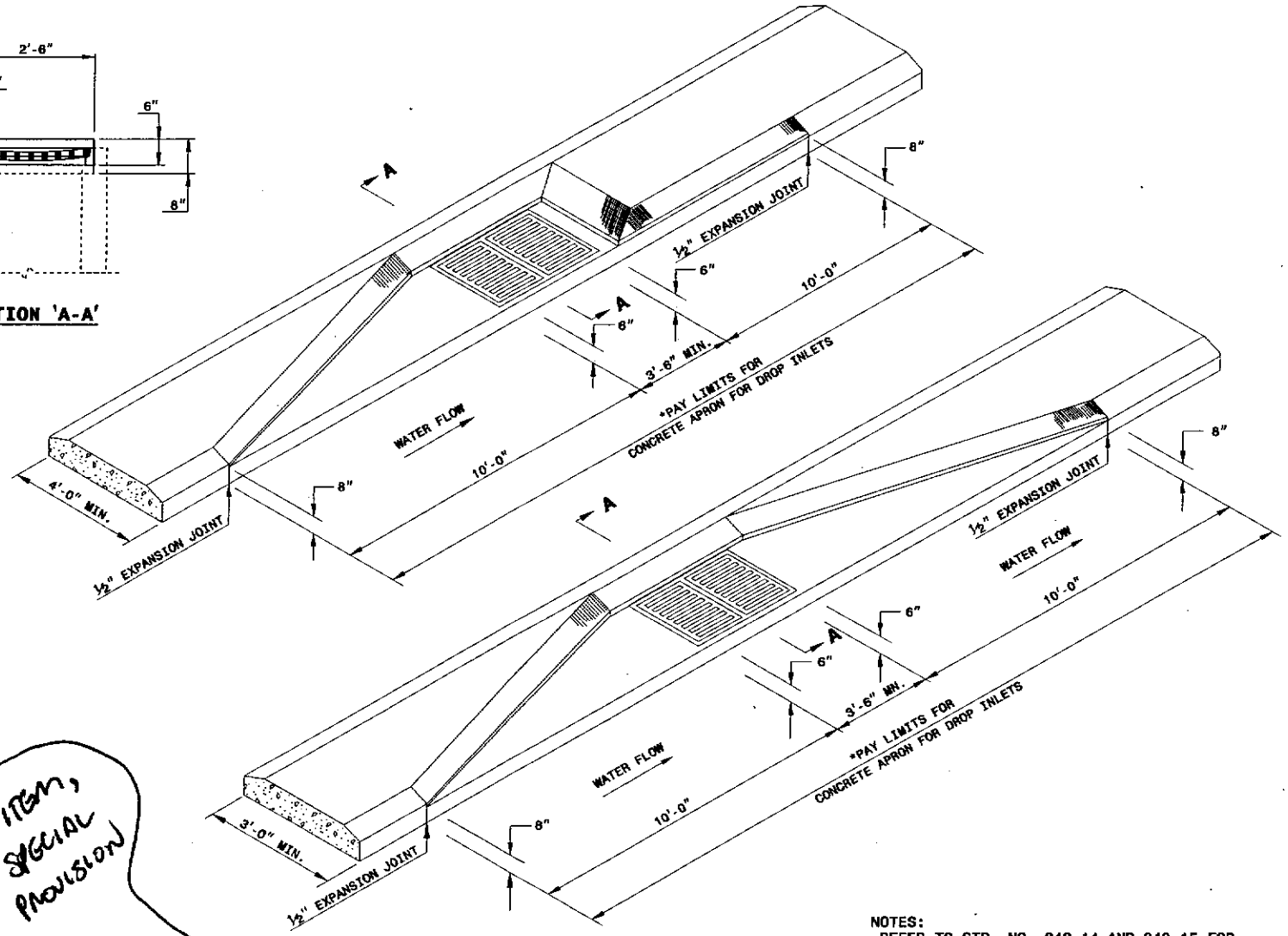

NOTES:
-REFER TO STD. NO. 840.14 AND 840.15 FOR DRAINAGE STRUCTURE.
-REFER TO STD. NO. 840.16 FOR GRATE AND FRAME.

NEW PAY ITEM,
NEW SPECIAL
PROVISION

*CONCRETE APRON IS INCIDENTAL TO CONSTRUCTION OF THE DRAINAGE STRUCTURE

NOW: PER EACH, CONCRETE TRANSITIONAL SECTION FOR DROP INLETS

STATE OF
NORTH CAROLINA
DEPT. OF TRANSPORTATION
DIVISION OF HIGHWAYS
RALEIGH, N.C.

7-06

ENGLISH STANDARD DRAWING FOR

METHOD FOR PLACEMENT OF DROP INLETS IN CONCRETE ISLANDS

SHEET 1 OF 1

852.06