ROADWAY DESIGN STAFF MEETING
December 3, 2008

- **Holiday Lunch – December 18, 2008**
  The Holiday Lunch for the Roadway Design Unit was held on Thursday, December 18, 2008.
  Merry Christmas to all employees!

- **Administrative Budget Cuts (Roadway Design Unit) – 14%**
  In response to the economic downturn, the Roadway Design Unit was asked to identify 3%, 5%, 7% and 14% budget reductions from their operating budget. This is the Administrative Operating Budget for the unit. The operating budget cuts have been identified and submitted to the Highway Design Branch.

- **Location and Design Approval Submittals**
  Submit half size plans or electronic PDF files to Jamille Robbins when you submit your project to the Hydraulics Unit for Hydraulic Design Plans (THYD). He will use the plans and planning document to complete the Location and Design Approval letter. Broad approval and Right of Way authorization follows Location and Design Approval. Jamille needs the title sheet, typical section sheets and the plan sheets.

- **Utility Pole Placement**
  Add a value for clear zone to your project criteria worksheet for all projects. The information in conjunction with the project design will establish the right of way, permanent utility easement and utility pole placement for the roadway projects.

  A letter documenting proposed right of way, permanent utility easement, and utility pole placement will be distributed in the spring of 2009.

- **Hearing Map Legend**
  Information was provided to document the use of proposed easements (drainage, construction and utility), existing utility easement, and noise sensitive area for design hearing maps and hearing map legends.

- **Regional Assignments _ Interstate, Rural and Urban Projects**
  See the action plan item for the Roadway design Unit dated November 10, 2008.

- **Pipe Underdrain Summary as a Number 3 Series Plan Sheet**
  Effective with the July 21, 2009 letting, include a table in the plans disclosing the location of underdrains for the project. This table should be part of the number 3 series plan sheets. The data should include the line items (and locations) as listed in the Geotechnical Report with the associated quantities. The contingency items and quantities should also be included at the bottom of table, so the totals for quantities match the pay item quantities.

- **Monumentation for Permanent Easements**
  Effective with the January 16, 2009 Right of Way Plans, you will need to show proposed permanent easement with iron pin and cap marker on the Roadway Plans. See the attachments for documentation. This will require the use of an updated Symbolic Sheet for each project.

Minutes Approved By: _____

Jay A Bennett, PE
State Roadway Design Engineer
1/29/09

LEGEND

- BUILDINGS
- EXISTING RIGHT OF WAY
- PROPOSED RIGHT OF WAY
- PROPOSED EASEMENTS (DRAINAGE, CONSTRUCTION, AND UTILITY)
- EXISTING ROADWAY
- EXISTING ROADWAY TO BE REMOVED
- EXISTING ROADWAY TO BE RESURFACED
- PROPOSED ROADWAY
- TEMPORARY ROADWAY / DETOURS
- FUTURE ROADWAY
- PROPOSED STRUCTURES, ISLAND, CURB AND GUTTER
- EXISTING STRUCTURES, ISLAND, CURB AND GUTTER TO BE RETAINED
- EXISTING STRUCTURES, ISLAND, CURB AND GUTTER TO BE REMOVED
- FUTURE STRUCTURES, ISLAND, CURB AND GUTTER
- LAKES, RIVER, STREAMS AND PONDS
- RAILROAD RIGHT OF WAY
- EXISTING UTILITY EASEMENT
- CEMETERIES
- PROPOSED CONTROL OF ACCESS
- PROPOSED PARTIAL CONTROL OF ACCESS
- EXISTING CONTROL OF ACCESS
- 0000 / 0000 — PRESENT ADT / FUTURE ADT
- PROPERTY LINES
- NOISE SENSITIVE AREA
- EXISTING TRAFFIC SIGNAL
- PROPOSED TRAFFIC SIGNAL
- HPB — HISTORIC PROPERTY BOUNDARY
- WLB — WETLAND LIMITS BOUNDARY
- BZ — STREAM BUFFER ZONE

RD245853 12/2/2008 roadway_hearingmap eadouglas IT02-T1100cf

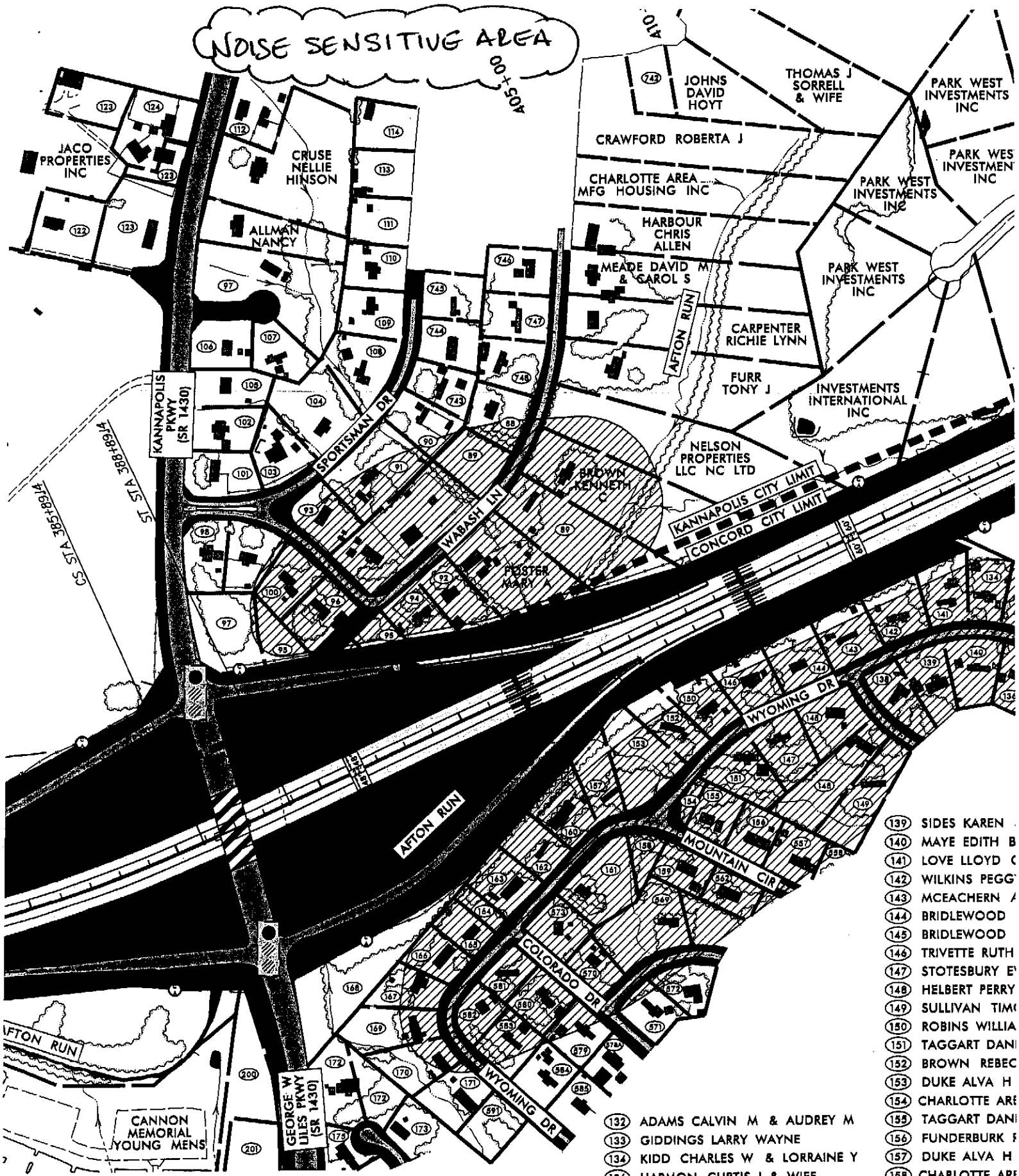
NOISE SENSITIVE AREA
A05+00
JACO PROPERTIES INC
CRUSE NELLIE HINSON
ALLMAN NANCY
JOHNS DAVID HOYT
THOMAS J SORRELL & WIFE
PARK WEST INVESTMENTS INC
CRAWFORD ROBERTA J
CHARLOTTE AREA MFG HOUSING INC
HARBOUR CHRIS ALLEN
MEADE DAVID M & CAROL S
AFTON RUN
CARPENTER RICHIE LYNN
FURR TONY J
INVESTMENTS INTERNATIONAL INC
NELSON PROPERTIES LLC NC LTD
BROWN KENNETH C
KANNAPOLIS CITY LIMIT
CONCORD CITY LIMIT
KANNAPOLIS PKWY (SR 1430)
SPORTSMAN DR
WABASH LN
FOSTER MARY A
ST STA 388+89.4
CS STA 385+89.4
WYOMING DR
MOUNTAIN CIR
COLORADO DR
GEORGE W LILES PKWY (SR 1430)
CANNON MEMORIAL YOUNG MENS
139 SIDES KAREN
140 MAYE EDITH B
141 LOVE LLOYD C
142 WILKINS PEGG
143 MCEACHERN A
144 BRIDLEWOOD
145 BRIDLEWOOD
146 TRIVETTE RUTH
147 STOTESBURY E
148 HELBERT PERRY
149 SULLIVAN TIM
150 ROBINS WILLIA
151 TAGGART DAN
152 BROWN REBEC
153 DUKE ALVA H
154 CHARLOTTE ARE
155 TAGGART DAN
156 FUNDERBURK
157 DUKE ALVA H
158 CHARLOTTE ARE
159 WILLIX GEORG
132 ADAMS CALVIN M & AUDREY M
133 GIDDINGS LARRY WAYNE
134 KIDD CHARLES W & LORRAINE Y
136 HARMON CURTIS L & WIFE
138 ROWLAND FRANCES

ACTION PLAN ITEM (ROADWAY DESIGN UNIT) – Highway Design Branch
Regional Assignments
Memorandum Distribution Date: July 11, 2008
November 10, 2008

Regional assignments (and project teams) will be an effective tool for managing projects during the planning, design, construction and maintenance phases. The primary objective is use a project team to guide a project through the plan development, construction and maintenance using integrated decision-making. The results are improved communication, minimized re-study and re-design, and reduced project development time.

All projects without completed surveys and plan sheets will be re-assigned in accordance with the regional assignments. Thirty bridge replacement projects scheduled for scoping meetings in the fall of 2008 and construction in 2012 will be re-assigned. All bridge replacement projects scheduled to use field scoping meetings in the spring of 2009 will be regionally assigned. All new assignments will by assigned by region.

Regional teams are a valuable resource for breaking down barriers, fostering creativity and teamwork, and improving project delivery. The performance dashboard and appraisal metrics within each business unit will be used to measure the delivery of Transportation Improvement Projects.

STATE OF NORTH CAROLINA
DEPARTMENT OF TRANSPORTATION

MICHAEL F. EASLEY
GOVERNOR

LYNDO TIPPETT
SECRETARY

ROADWAY DESIGN UNIT
NOV 0 5 2008
ALLEN BLEVINS SYKES
BREW C. HOUSER T. HOUSER
LOVERING D. TAYLOR GOODWIGHT
SPEER
THOMAS
WALLS
SIGNATURE
REVIEW DISCUSS WITH

April 18, 2008

MEMORANDUM TO: Jay A. Bennett, P.E.
State Roadway Design Engineer

ATTENTION: H. Davidian Byrd, P.E.
Engineering Coordination Squad Leader

FROM: Njoroge W. Wainaina, P.E.
State Geotechnical Engineer

STATE PROJECT: 34414.1.1 (R-2301A)
F.A. PROJECT:
COUNTY: Jones / Craven
DESCRIPTION: US 17 (New Bern Bypass) from US 17 South of New Bern to US 70

SUBJECT: Geotechnical Report – Revised Design and Construction Recommendations

The Geotechnical Engineering Unit has completed a subsurface investigation for this project and presents the following revised recommendations. **This report supersedes the Design and Construction Recommendations report dated June 25, 2001 and the Roadway Foundation Recommendations report dated July 30, 2001. Do not include the July 2001 Special Provision Embankment Monitoring and Embankment Settlement Gauge Detail.**

I. Slope Embankment Stability and Settlement

A. Slope Design
Recommend roadway side slopes be constructed no steeper than 3:1 (H:V) in order to assist in erosion control and establish vegetation.

B. Undercut (Soft Foundation Soils)
Recommend 2,500 cubic meters of undercut be included in the contract as a contingency item to be used at the discretion of the Engineer. Roadway embankment material above undercut areas may be used as borrow at the discretion of the Engineer.

MAILING ADDRESS:
EASTERN REGIONAL OFFICE
GEOTECHNICAL ENGINEERING UNIT
1570 MAIL SERVICE CENTER
RALEIGH NC 27699-1570

TELEPHONE: 919-662-4710
FAX: 919-662-3095

WEBSITE: WWW.DOH.DOT.STATE.NC.US

LOCATION:
3301 JONES SAUSAGE RD., SUITE 100
GARNER, NC 27529-9489

Line	Station(±)	Location
-Y1-	16+97 to 21+51	Left side
-DR1-	5+01 to 7+60	Right side
-DR1-	12+10 to 17+05	Right side
-Ramp A-	6+20 to 7+60	Right side
-Ramp B-	6+60 to 7+60	Left side
-Ramp C-	7+10 to 8+60	Right side
-Ramp D-	7+20 to 9+00	Left side

Recommend for inclusion in the contract the Special Provision "Lateral Ditches."

E. Subsurface Drainage-Underdrains

Proposed plans consist of constructing curb and gutter along the loops at the US 70 interchange. Due to seasonal high ground water and elimination of the existing ditches along US 70 and US 17, we recommend 150mm perforated underdrain be installed to a maximum depth of 1.8 meters below subgrade or as deep as outfall will allow at the following locations:

Line	Station(±)	Location
-L-	9+68 to 11+20	Left and right side
-Y1-	16+97 to 21+51	Right side
-Y1LT-	10+09 to 13+64	Left and right side
-Y4-	12+40 to 15+20	Left and right side
-Loop A-	3+50 to 4+40	Left side
-Loop B-	3+70 to 4+40	Right side
-Loop C-	3+70 to 4+60	Left side
-Loop D-	3+70 to 4+60	Right side

We recommend that 1500 linear meters of perforated underdrain be included in the contract for use in the above listed areas. It is also recommended as a contingency item that an additional 500 linear meters of perforated underdrain be included in the contract to be utilized at the discretion of the Engineer.

III. Borrow Specifications

A. Common Borrow

Common borrow for embankment construction to subgrade shall meet Coastal Plain specifications outlined in the Standard Specifications, Article 1018-2, Section II.

B. Select Granular Material

Select material for backfill for fabric for soil stabilization or in water shall meet the criteria outlined in the Standard Specifications, Article 1016-3, Class III. Recommend 32,000 cubic meters of select material meeting the above specifications be included in the contract for use in areas noted in Section I.B., I.C/D. and Section II.C. The select material should be placed to a height of 1 meter above fabric for soil stabilization and/or water level. Above this level, common borrow may be utilized.

STATE OF NORTH CAROLINA
DEPT. OF TRANSPORTATION
DIVISION OF HIGHWAYS
RALEIGH, N.C.

7-06

ENGLISH STANDARD DRAWING FOR

PIPE UNDERDRAIN AND BLIND DRAIN

GENERAL NOTES:
WHEN PROOF ROLLING IS REQUIRED, PLACE PIPE UNDERDRAINS A MINIMUM OF 6' DEEP.

CONCRETE PAD NOTE:
CONNECT PIPE OUTLET INTO DRAINAGE STRUCTURE WHEREVER POSSIBLE. IF NOT CONNECTED TO DRAINAGE STRUCTURE, PROTECT END OF PIPE BY CONCRETE PAD FOR OUTLET END OF UNDERDRAIN. PADS ARE NEEDED AT LOCATIONS WHERE PIPE IS NOT PLACED IN DRAINAGE STRUCTURE TO FACILITATE MAINTENANCE AND AID IN IDENTIFICATION.

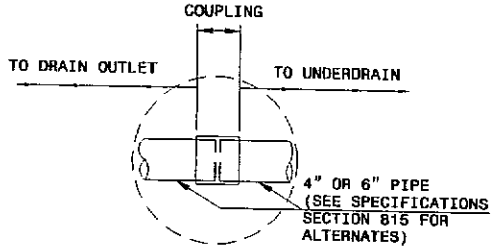

AUXILIARY VIEW

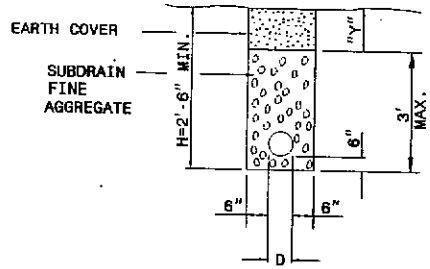

PIPE UNDERDRAIN

Y = 12" WHEN "H" IS 4'-0" OR LESS
Y = VARIABLE WHEN "H" IS OVER 4'-0"

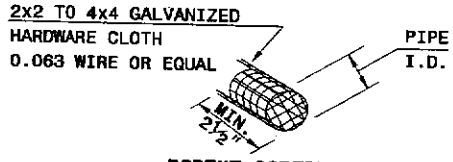

RODENT SCREEN

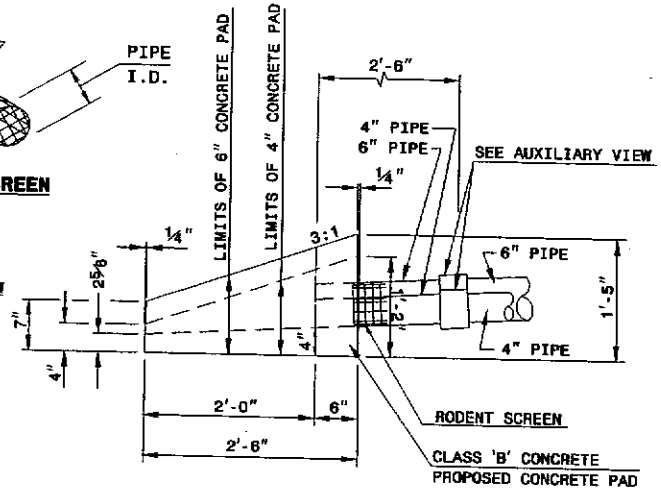

ELEVATION VIEW

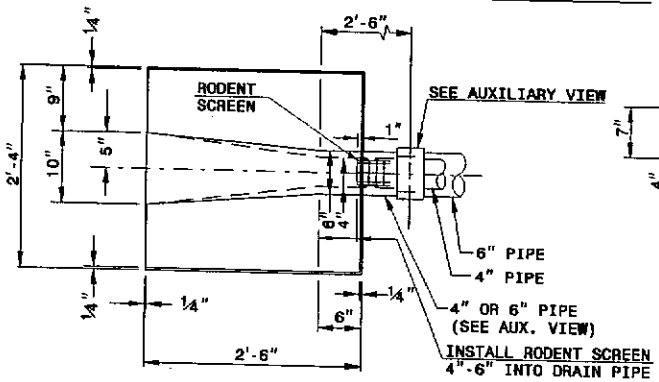

PLAN VIEW

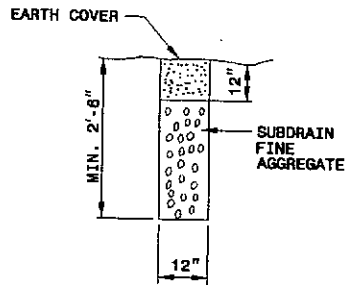

BLIND DRAIN

SUBDRAIN QUANTITIES	
TYPE	EXCAV. OR FINE AGGR. CU. YDS. PER FT. DEPTH/LIN. FT.
UNDER DRAIN	0.056
BLIND DRAIN	0.037

THE CONCRETE PAD CONSISTS OF 4" DRAIN 0.137 CUBIC YARDS, 6" DRAIN 0.177 CUBIC YARDS CLASS "B" CONCRETE.

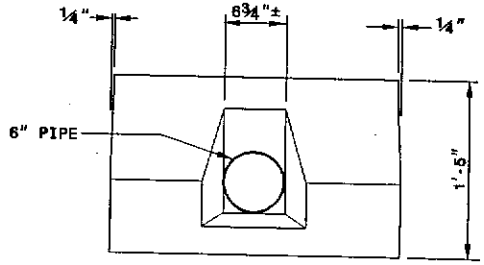

END ELEVATION VIEW

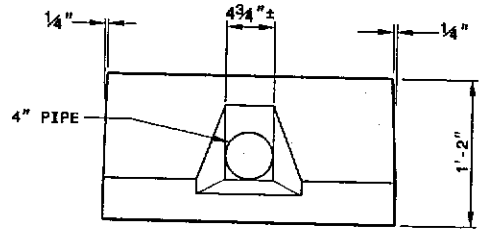

END ELEVATION VIEW

SHEET 1 OF 1
815.03

STATE OF NORTH CAROLINA
DEPT. OF TRANSPORTATION
DIVISION OF HIGHWAYS

7-06

ENGLISH STANDARD DRAWING FOR
PIPE UNDERDRAIN AND BLIND DRAIN

SHEET 1 OF
815.0

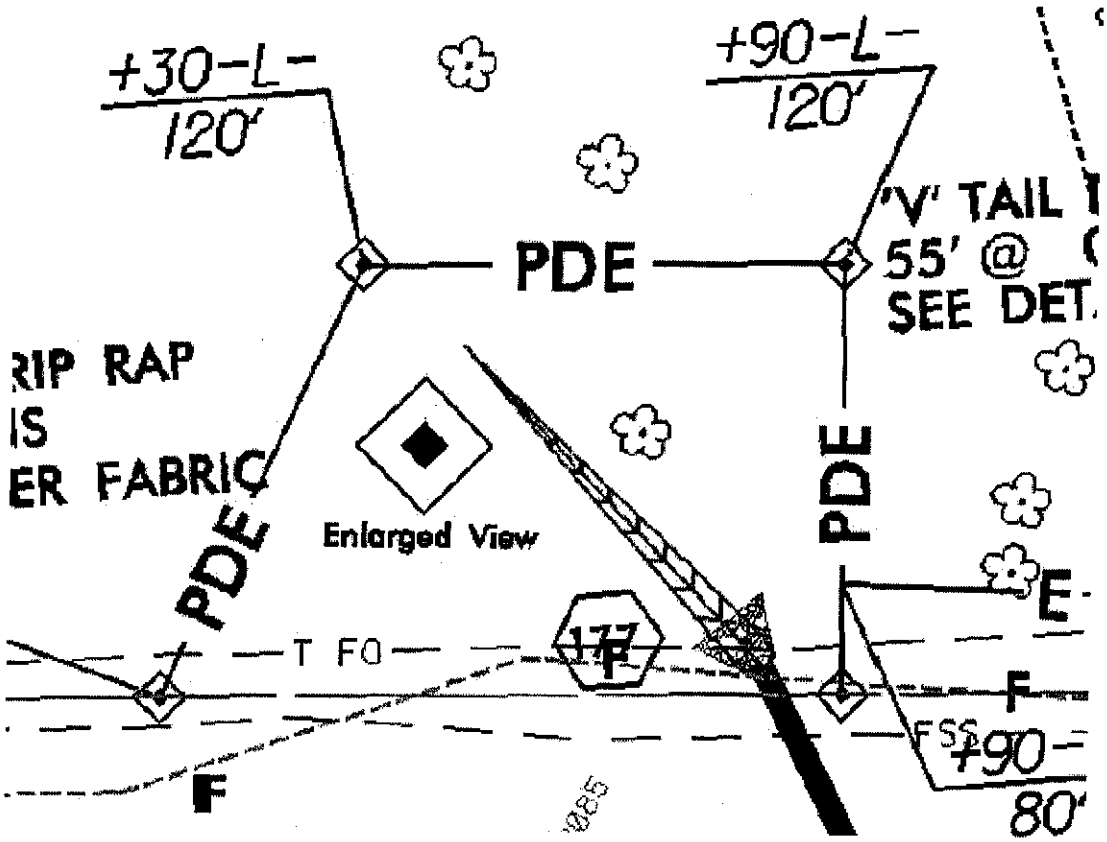
+30-L-
120'
+90-L-
120'
'V' TAIL
55' @
SEE DET.
PDE
RIP RAP
IS
ER FABRIC
PDE
Enlarged View
PDE
E
T FO
177
F
F
FSS
+90-
80'
F

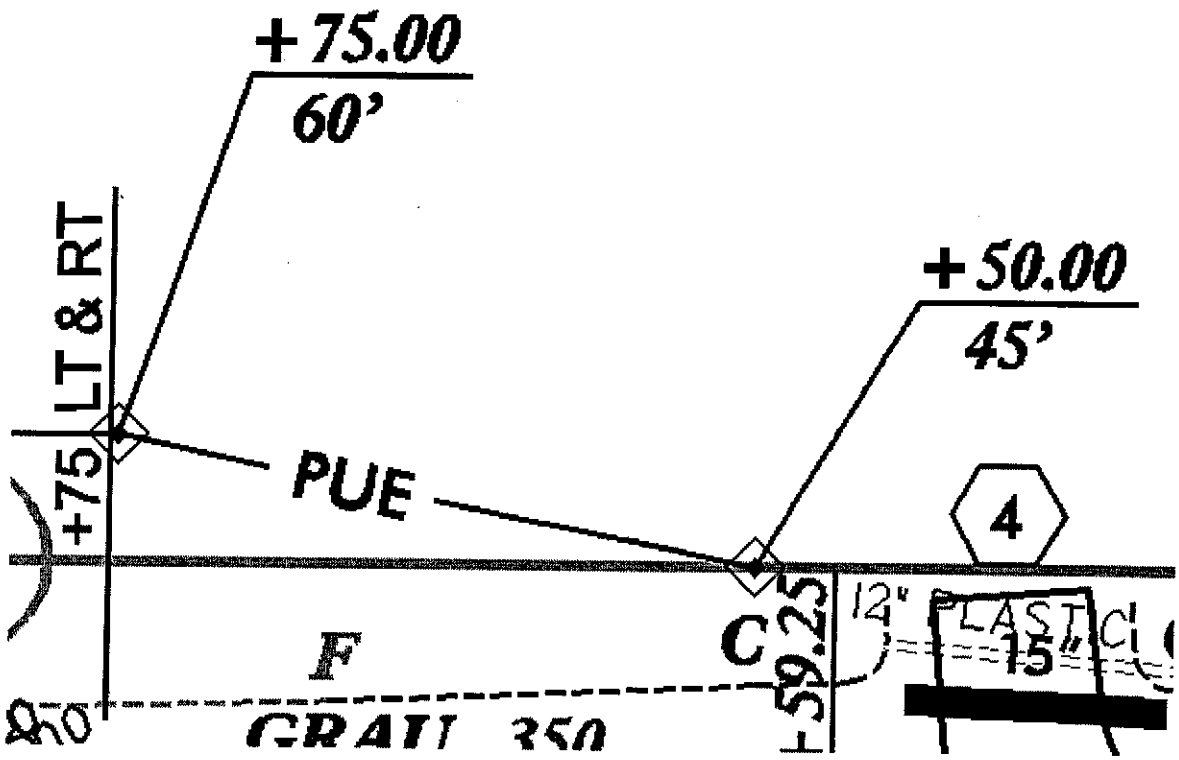
+75.00
60'
+50.00
45'
LT & RT
+75
PUE
4
C
59.25
12" PLASTIC
15"
F
GRAU 350

RAILROADS:

Standard Gauge — CSX TRANSPORTATION

RR Signal Milepost — MILEPOST 35

Switch — SWITCH

RR Abandoned

RR Dismantled

RIGHT OF WAY:

Baseline Control Point

Existing Right of Way Marker

Existing Right of Way Line

Proposed Right of Way Line

Proposed Right of Way Line with Iron Pin and Cap Marker

Proposed Right of Way Line with Concrete or Granite Marker

Proposed Permanent Easement with Iron Pin and Cap Marker

Existing Control of Access

Proposed Control of Access

Existing Easement Line — E