NOV 0 2 2009

__SYKES __MUMFORD
__BREW __T. HOUSER
__LOVERING __D. TAYLOR __GOODNIGHT
__J. MOORE __C. HAGE __SPEER
__B. MOORE __THOMAS
X WALLS
EUGENE A. CONTI, JR. SIGNATURE
__F.Y.I. SECRETARY
REVIEW/DISCUSS WITH _____

STATE OF NORTH CAROLINA
DEPARTMENT OF TRANSPORTATION

BEVERLY EAVES PERDUE
GOVERNOR

October 30, 2009

MEMORANDUM TO: K. J. Kim, P.E.
Eastern Regional Geotechnical Manager

John Pilipchuk, L.G., P.E.
Western Regional Geotechnical Manager

Eric Williams, P.E.
Geotechnical Design Supervisor

Tom Hearne, P.E.
GeoPavement Supervisor

Kevin Sebold
Senior GeoPavement Engineer

FROM: Njoroge Wainaina, P.E.
State Geotechnical Engineer

SUBJECT: Geotextile for Pavement Stabilization Project Special Provision and Inset

The Technical Support Group of the Support Services Section has completed the development of the new standard Geotextile for Pavement Stabilization Project Special Provision (PSP) at the request of the GeoPavement Group. In addition, the Roadway Design Unit has developed an inset to be used in the roadway plans. The PSP and inset are attached for your reference. This PSP is effective with the February, 2010 letting. For previously completed projects that require this, it will be necessary to send addendums to recommend the geotextile for pavement stabilization.

If there are any questions regarding this memorandum, please contact Scott Hidden, P.E. at (919) 250-4088 or Tom Hearne, P.E. at (704) 455-8902.

Attachments: Geotextile for Pavement Stabilization Project Special Provision and Inset

cc: Jay Bennett, P.E., State Roadway Design Engineer
Jim McMellon, P.E., Roadway Project Design Engineer
Rodger Rochelle, P.E., Transportation Program Management Director
Randy Garris, P.E., State Contract Officer
Ron Hancock, P.E., State Construction Engineer

MAILING ADDRESS:
NC DEPARTMENT OF TRANSPORTATION
GEOTECHNICAL ENGINEERING UNIT
1589 MAIL SERVICE CENTER
RALEIGH NC 27699-1589

TELEPHONE: 919-250-4088
Fax: 919-250-4237

Website: www.ncdot.org./doh

LOCATION:
CENTURY CENTER COMPLEX
ENTRANCE B-2
1020 BIRCH RIDGE DRIVE
RALEIGH NC 27610

GEOTEXTILE FOR PAVEMENT STABILIZATION: (2-16-10)

Description

Furnish and install geotextile for pavement stabilization in accordance with the contract. Geotextile for pavement stabilization may be required to prevent longitudinal pavement cracks and provide separation between the subgrade and pavement structure at locations shown on the plans.

Materials

Provide Type 1 Typical Certified Mill Test Report in accordance with Article 106-3 of the *Standard Specifications* and minimum average roll values (MARV) as defined by ASTM D4439 for geotextile properties. For testing geotextiles, a lot is defined as a single day's production.

Load, transport, unload and store geotextiles such that they are kept clean and free of damage. Identify, store and handle geotextiles in accordance with ASTM D4873. Geotextiles with defects, flaws, deterioration or damage will be rejected. Do not leave geotextiles uncovered for more than 7 days.

Use geotextiles with a minimum roll width of 13 ft (4 m) that meet the requirements of Article 1056-1 of the *Standard Specifications*. Machine direction (MD) and cross-machine direction (CD) are as defined by ASTM D4439. Use woven polyester or polypropylene geotextiles with properties meeting the following requirements.

Property	Test Method	Requirement (MARV)	
		MD	CD
Wide Width Tensile Strength @ 5% Strain	ASTM D4595	1900 lbs/ft (27.7 kN/m) min	1900 lbs/ft (27.7 kN/m) min
Wide Width Tensile Strength @ Ultimate	ASTM D4595	4800 lbs/ft (70.0 kN/m) min	4800 lbs/ft (70.0 kN/m) min
Permittivity	ASTM D4491	0.10 sec^{-1} min	
Apparent Opening Size	ASTM D4751	30 US sieve (0.60 mm) max	
Ultraviolet Stability (retained strength)	ASTM D4355	70 %* min	
Melting Point	ASTM D276	300 °F (150 °C) min	

*after 500 hours of exposure

Construction Methods

Construct embankments to subgrade elevation in accordance with the Contract. The Engineer will determine if a geotextile for pavement stabilization is required at locations shown on the plans based on testing subgrade soils for quality. For subgrades that are not stabilized, allow 24 calendar days for the Engineer to determine if a geotextile for pavement stabilization is required.

When using a geotextile for pavement stabilization on a stabilized subgrade, stabilize subgrade soils to 12" (300 mm) beyond the bottom of the base course as shown on the plans.

Place the geotextile for pavement stabilization on the subgrade immediately below the pavement structure as shown on the plans. Place geotextiles with machine direction (MD) perpendicular to the centerline of the embankment. The MD is the direction of the length or long dimension of the roll. Do not splice geotextiles in the MD. Extend geotextiles 12" (300 mm) beyond the bottom of the base course as shown on the plans. Place geotextiles in slight tension free of kinks, folds, wrinkles or creases.

Cover the entire subgrade at each location by placing geotextiles adjacent to each other in the cross-reinforcement direction (CD), i.e., perpendicular to the MD. The CD is the direction of the width or short dimension of the roll. Overlapping adjacent geotextiles in the CD is permitted but not required. Overlap geotextiles in the direction that base courses will be placed to prevent lifting the edge of the top geotextile.

Do not damage the geotextile for pavement stabilization when constructing base courses. Place and compact base courses in accordance with the *Standard Specifications*. Do not operate heavy equipment on the geotextiles more than necessary to construct the pavement structure. Replace any damaged geotextiles to the satisfaction of the Engineer.

Measurement and Payment

Geotextile for Pavement Stabilization will be measured and paid for in square yards (meters). Geotextiles will be measured along the top surface of the subgrade and no additional payment will be made for overlapping geotextiles. The contract unit price bid for *Geotextile for Pavement Stabilization* will be full compensation for supplying, transporting and installing geotextiles.

Payment will be made under:

Pay Item	**Pay Unit**
Geotextile for Pavement Stabilization	Square Yard (Meter)

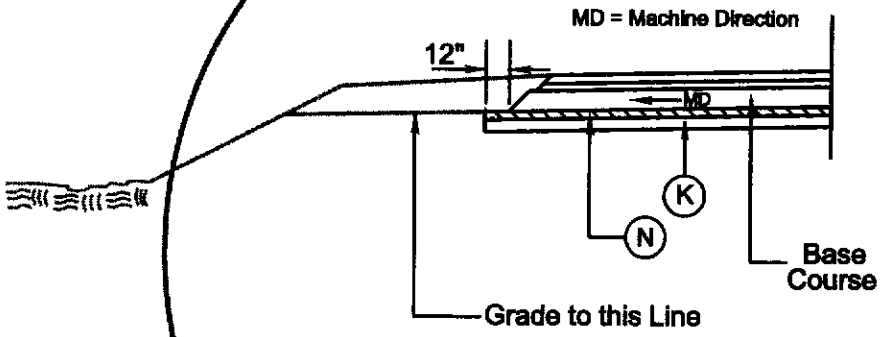

TYPICAL SECTION NO. 2A

-L- Middle Rd.

USE TYPICAL SECTION NO. 2A
WITH TYPICAL 2, 3 & 4 AS FOLLOWS

-L- STA. 42+25.00 TO STA. 53+16.34

PAVEMENT SCHEDULE	
C1	3" TYPE S9.5C
C2	VAR. TYPE S9.5C
C3	2" TYPE S9.5B
C4	3" TYPE S9.5B
C5	VAR. TYPE S9.5B
D1	4" TYPE I19.0C
D2	VAR. TYPE I19.0C
D3	2.5" TYPE I19.0B
D4	4" TYPE I19.0B
D5	VAR. TYPE I19.0B
E1	4.5" TYPE B25.0C
E2	VAR. TYPE B25.0C
E3	4" TYPE B25.0B
E4	VAR. TYPE B25.0B
J1	8" ABC
J2	10" ABC
J3	VAR. DEPTH ABC
K	Stabilized Sub-Grade
N	Geotextile for Pavement Stabilization
R3	SHOULDER BERM GUTTER
R4	5" MONO. CONC. ISLAND
R5	CONC. MEDIAN BARRIER
T	EARTH MATERIAL