STATE OF NORTH CAROLINA
DEPARTMENT OF TRANSPORTATION

EXAMPLE "NEW" STRUCTURE RECOMMENDATION FORMAT

MICHAEL F. EASLEY
GOVERNOR

LYNDO TIPPETT
SECRETARY

MEMO TO: Mr. Greg Perfetti, PE
State Bridge Design Engineer

FROM: Jay A. Bennett, PE
State Roadway Design Engineer

DATE: March 25, 2003

SUBJECT: Project 8.2010201 (B-3612) Bertie County
F. A. Project BRZ-1123(8)
Bridge No. 143 over Branch of Indian Creek on
SR 1123 (Billip Club Road)

**Structure Recommendation Plans**

Attached is a copy of the structure recommendation plans.

If you have any questions, please contact Jimmy Goodnight, Project Engineer.

JAB/lto

Attachments

cc: Jimmy Goodnight (w/attachments)

MAILING ADDRESS:
NC DEPARTMENT OF TRANSPORTATION
ROADWAY DESIGN UNIT
1582 MAIL SERVICE CENTER
RALEIGH NC 27699-1582

TELEPHONE: 919-250-4016
FAX: 919-250-4036

WEBSITE: WWW.DOH.DOT.STATE.NC.US

LOCATION:
CENTURY CENTER COMPLEX
BUILDING A
1000 BIRCH RIDGE DRIVE
RALEIGH NC

See Sheet 1-A For Index of Sheets

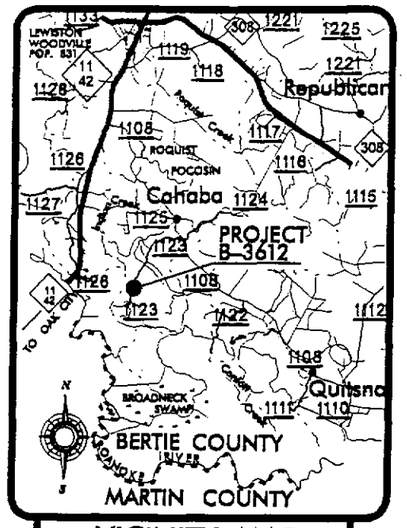


VICINITY MAP

# STATE OF NORTH CAROLINA
# DIVISION OF HIGHWAYS

# *BERTIE COUNTY*

***LOCATION: BRIDGE No. 143 OVER BRANCH OF INDIAN CREEK ON SR-1123 (BILLIP CLUB ROAD)***

***TYPE OF WORK: GRADING, DRAINAGE, PAVING, AND STRUCTURES***

| STATE | STATE PROJECT REFERENCE NO. | SHEET NO. | TOTAL SHEETS |
|---|---|---|---|
| N.C. | B-3612 | 1 | |

| STATE PROJ. NO. | F.A. PROJ. NO. | DESCRIPTION |
|---|---|---|
| 8.2010201 | BRZ-1123(8) | P.E. |

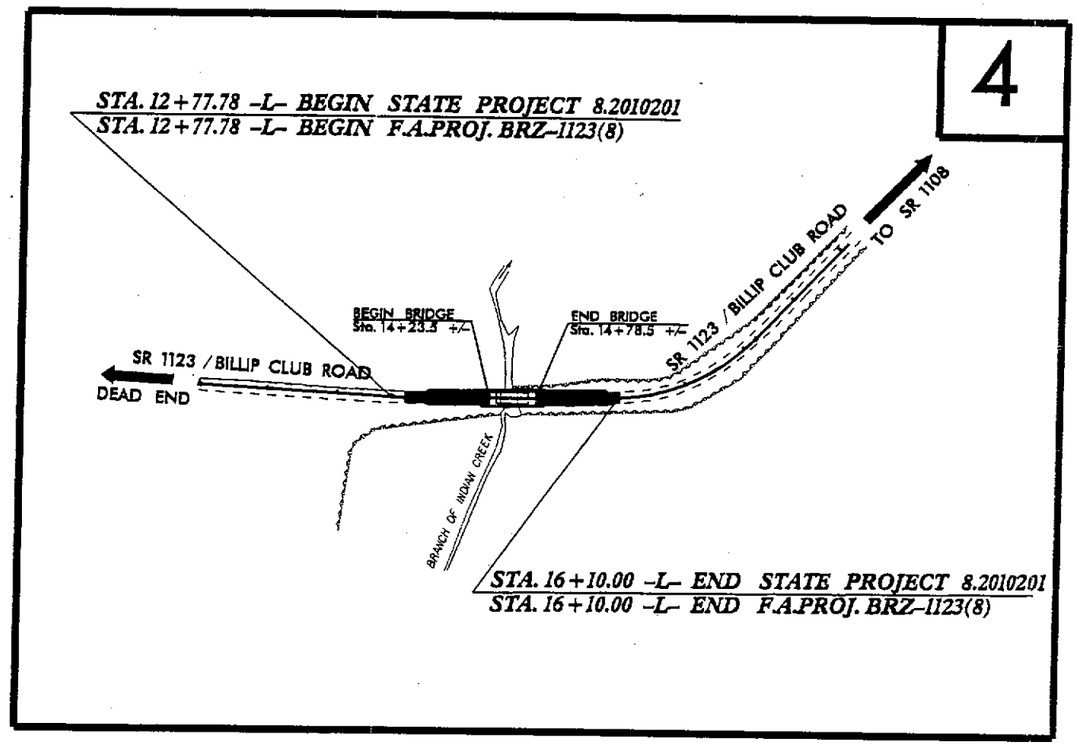


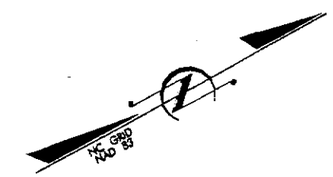


CLEARING ON THIS PROJECT SHALL BE PERFORMED TO THIS LIMITS ESTABLISHED BY METHOD ???

THIS PROJECT IS NOT WITH IN ANY MUNICIPAL BOUNDARIES

INCOMPLETE PLANS
DO NOT USE FOR R/W ACQUISITION
PRELIMINARY PLANS
DO NOT USE FOR CONSTRUCTION

**PROJECT: 8.2010201**

**B-3612**

***GRAPHIC SCALES***

50 25 0 50 100
PLANS

50 25 0 50 100
PROFILE (HORIZONTAL)

5 2.5 0 5 10
PROFILE (VERTICAL)

***DESIGN DATA***

ADT 2001 = 100
ADT 2025 = 200
DHV = 10 %
D = 60 %
T = 3 % *
V = 60 MPH
* TTST 1 % DUAL 2 %
FUNC CLASS = LOCAL

***PROJECT LENGTH***

*LENGTH ROADWAY F.A.PROJECT BRZ-1123(8) = 0.053 MILES*

*LENGTH STRUCTURE F.A. PROJECT BRZ-1123(8) = 0.010 MILES*

*TOTAL LENGTH OF STATE PROJECT 8.2010201 = 0.063 MILES*

Prepared in the Office of:
***DIVISION OF HIGHWAYS***
*1000 Birch Ridge Dr., NC, 27610*

*2002 STANDARD SPECIFICATIONS*

*RIGHT OF WAY DATE:* JUNE, 2003

*LETTING DATE:* JUNE 15,2004

JIMMY GOODNIGHT
*PROJECT ENGINEER*

LEON OLIVER
*PROJECT DESIGN ENGINEER*

*HYDRAULICS ENGINEER*

SIGNATURE P.E.

*ROADWAY DESIGN ENGINEER*

SIGNATURE P.E.

*DIVISION OF HIGHWAYS*
*STATE OF NORTH CAROLINA*

STATE DESIGN ENGINEER P.E.

*DEPARTMENT OF TRANSPORTATION*
*FEDERAL HIGHWAY ADMINISTRATION*

APPROVED
DIVISION ADMINISTRATOR DATE

| PROJECT REFERENCE NO. | SHEET NO. |
|---|---|
| B-3612 | 2 |
| ROADWAY DESIGN ENGINEER | PAVEMENT DESIGN ENGINEER |

INCOMPLETE PLANS
DO NOT USE FOR R/W ACQUISITION
PRELIMINARY PLANS
DO NOT USE FOR CONSTRUCTION

## PAVEMENT SCHEDULE

| | |
|---|---|
| C1 | PROP. APPROX. 1½" ASPHALT CONCRETE SURFACE COURSE, TYPE S9.5A, AT AN AVERAGE RATE OF 252 LBS. PER SQ.YD. |
| E1 | PROP. APPROX. 3½" ASPHALT CONCRETE BASE COURSE, TYPE B25.0B, AT AN AVERAGE RATE OF 399 LBS. PER SQ. YD. |
| T | EARTH MATERIAL. |

Note: Pavement Edge Slopes are 1:1 Unless Noted Otherwise.

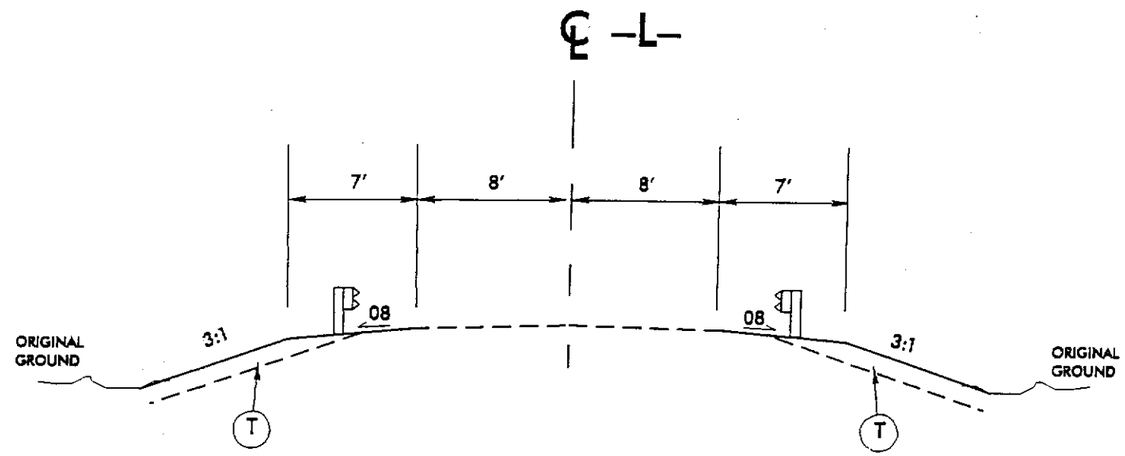


## TYPICAL SECTION NO.1

USE TYPICAL SECTION NO. 1 AS FOLLOWS:

-L- STA 13+04.75 to 13+29.00 RT
-L- STA 13+42.25 to 13+29.00 LT
-L- STA 15+85.00 to STA 15+97.25 LT
-L- STA 15+85.00 to STA 15+59.75 RT

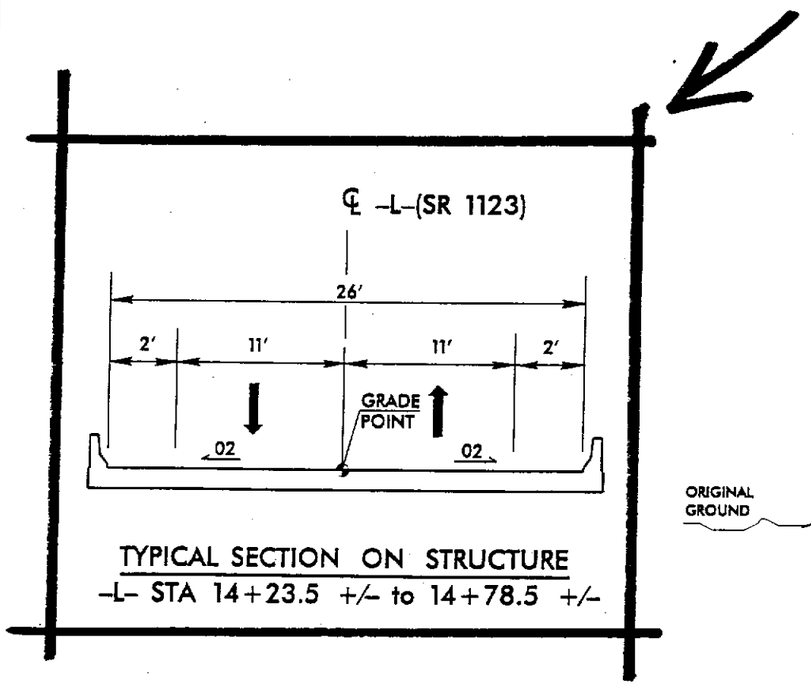


TYPICAL SECTION ON STRUCTURE
-L- STA 14+23.5 +/- to 14+78.5 +/-

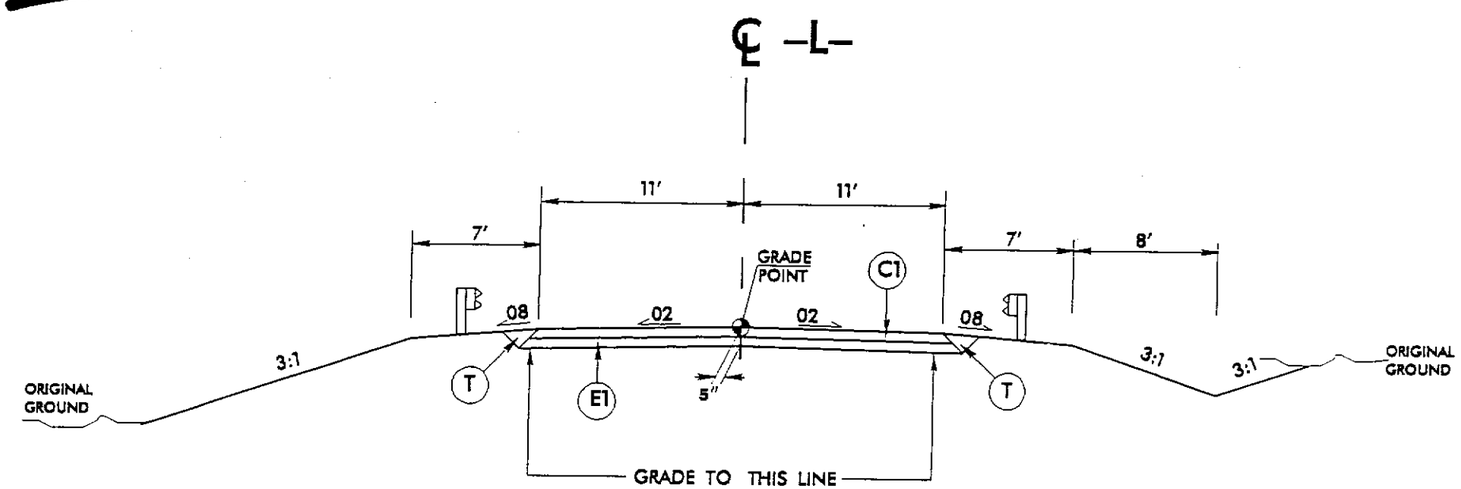


## TYPICAL SECTION NO.2

USE TYPICAL SECTION NO. 2 AS FOLLOWS:

-L- STA 13+29.00 to STA 14+23.50 +/- (Begin Bridge)
-L- STA 14+78.50 +/- (End Bridge) to STA 15+85.00

## DATUM DESCRIPTION

THE LOCALIZED COORDINATE SYSTEM DEVELOPED FOR THIS PROJECT IS BASED ON THE STATE PLANE COORDINATES ESTABLISHED BY NCDOT FOR MONUMENT "B3612-1" WITH NAD 1983/95 STATE PLANE GRID COORDINATES OF NORTHING 825742.842170 EASTING 2537935.663019
THE AVERAGE COMBINED GRID FACTOR USED ON THIS PROJECT (GROUND TO GRID) IS 0.9999407
THE N.C. LAMBERT GRID BEARING AND LOCALIZED HORIZONTAL GROUND DISTANCE FROM "B3612-1" TO ℄ STATION 12+77.78 IS N 18° 02' 20.99" E DISTANCE 729.94 FEET
ALL LINEAR DIMENSIONS ARE LOCALIZED HORIZONTAL DISTANCES
VERTICAL DATUM USED IS NAVD 88

| PROJECT REFERENCE NO. | SHEET NO. |
|---|---|
| B-3612 | 4 |
| R/W SHEET NO. | |
| ROADWAY DESIGN ENGINEER | HYDRAULICS ENGINEER |

INCOMPLETE PLANS
DO NOT USE FOR R/W ACQUISITION
PRELIMINARY PLANS
DO NOT USE FOR CONSTRUCTION

FOR -L- PROFILE SEE SHEET #5

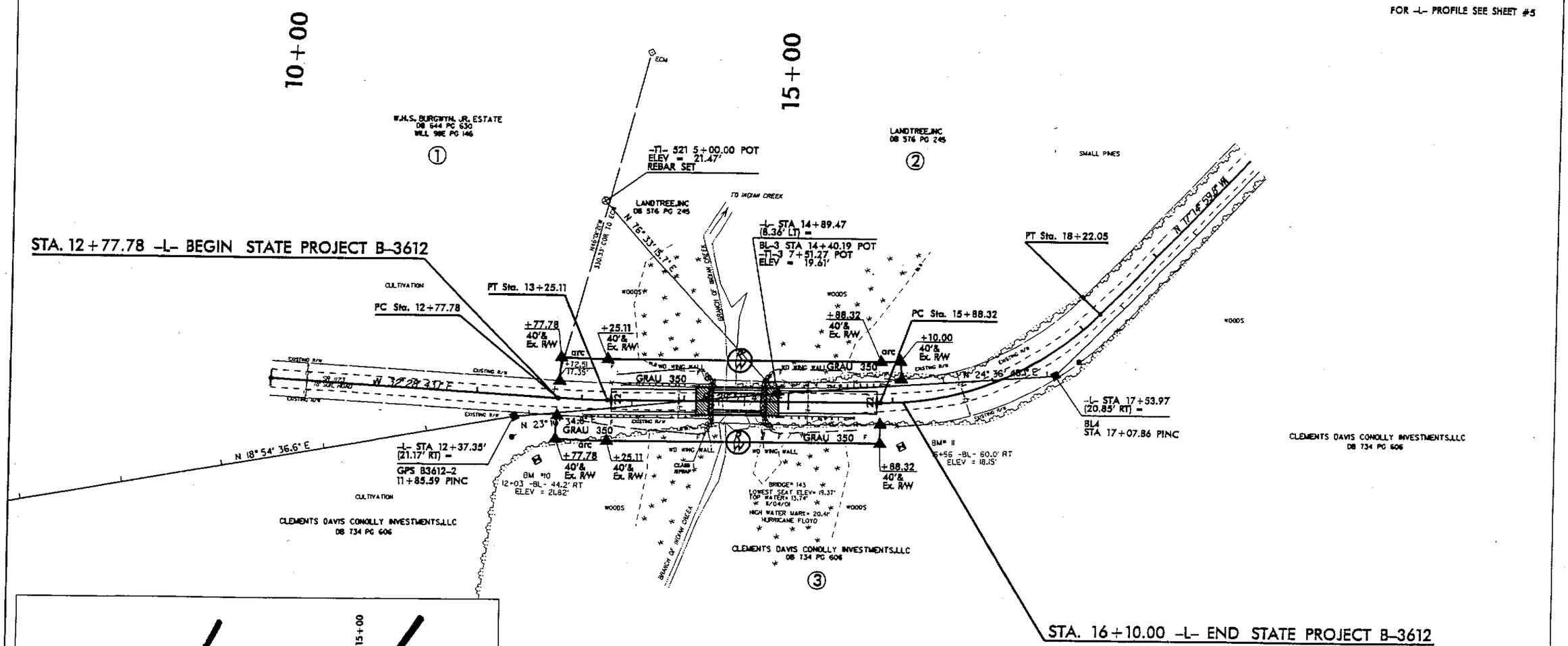


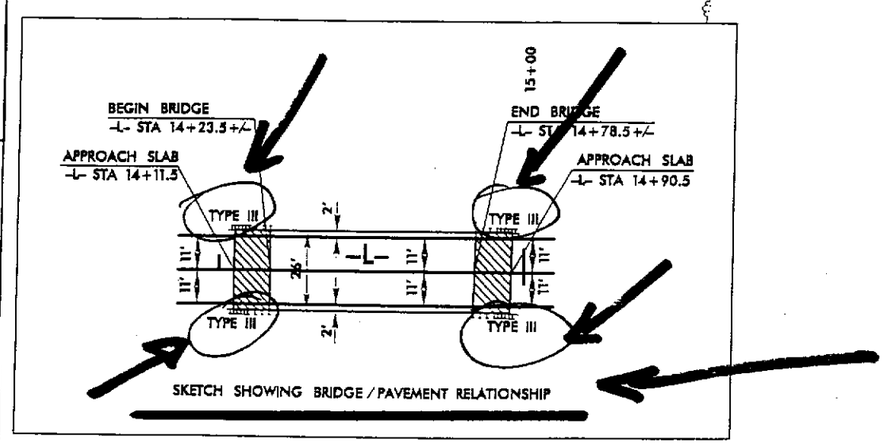

| PROJECT REFERENCE NO. | SHEET NO. |
|---|---|
| B-3612 | 5 |
| ROADWAY DESIGN ENGINEER | HYDRAULICS ENGINEER |

INCOMPLETE PLANS
DO NOT USE FOR R/W ACQUISITION
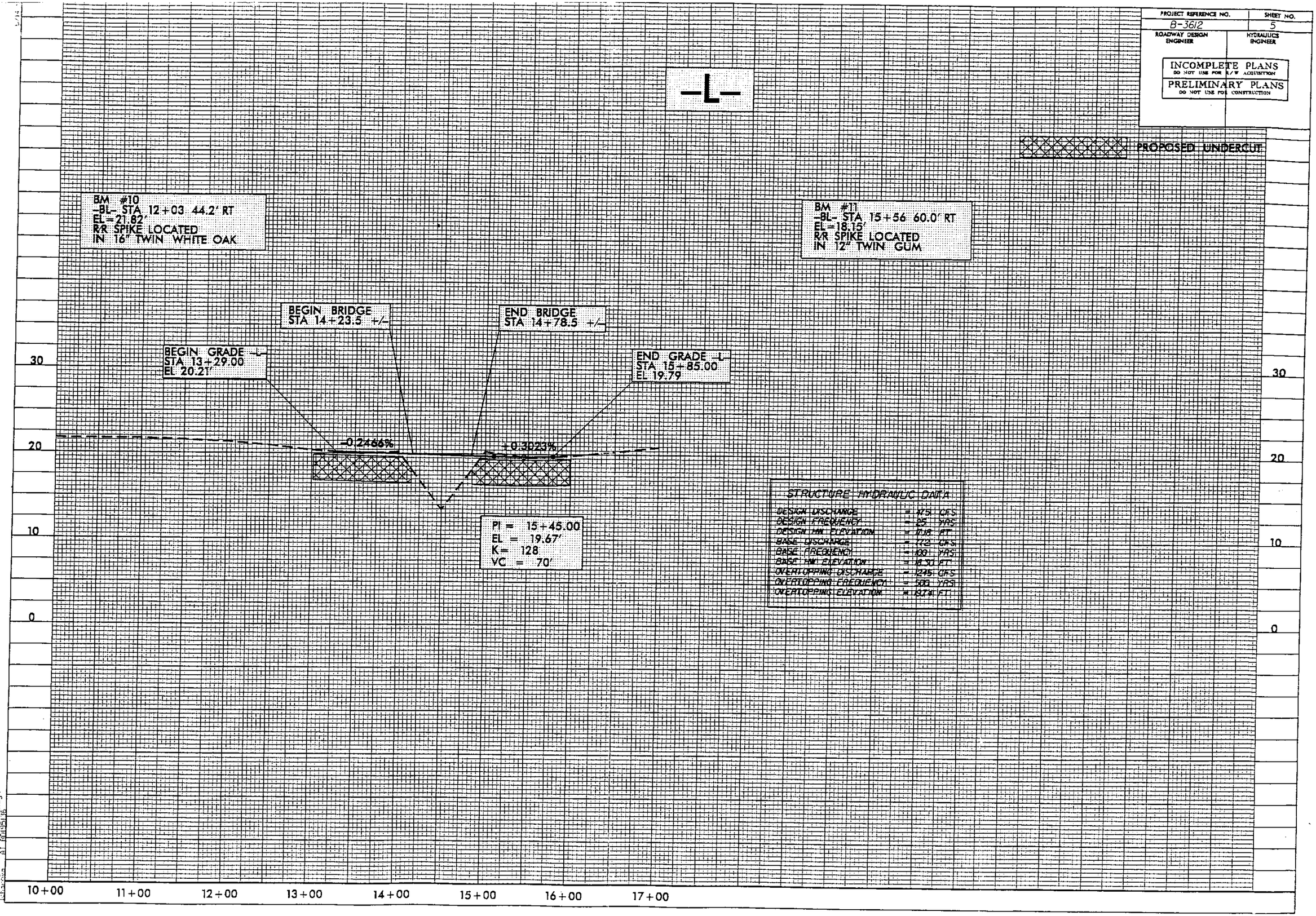
PRELIMINARY PLANS
DO NOT USE FOR CONSTRUCTION