STATE OF NORTH CAROLINA
DEPARTMENT OF TRANSPORTATION

BEVERLY EAVES PERDUE
GOVERNOR

EUGENE A. CONTI, JR.
SECRETARY

March 24, 2010

MEMORANDUM TO: Jay Bennett, P.E.
State Roadway Design Engineer

Division Engineers

FROM: Randy Garris, P.E.
State Contract Officer

SUBJECT: Subsurface Drainage

The Contract Standards and Development and Geotechnical Engineering Units have completed the development of a new special provision entitled "Subsurface Drainage" and a new detail drawing entitled "Subsurface Drain" to be effective with the July 20, 2010 letting. These new items have been attached to this memorandum for your reference. This new provision and detail drawing include changes to the pay items and plans. The purpose of this memorandum is to inform groups involved in plan and quantity estimate preparation about how to handle these changes.

The new "Subsurface Drainage" provision will replace Section 815 of the standard specifications. The __" *Subdrain Pipe Wyes, Tees, and Elbows* pay item has been deleted as payment for these is now included in the pipe pay items. The name of the outlet pay item has been changed from *Concrete Pad for Subdrain Pipe Outlet* to *Subdrain Pipe Outlets* as this item now includes payment for both concrete pads and connections to existing drainage structures. Two new pay items, *Filter Fabric for Subsurface Drains* and *Subdrain Coarse Aggregate*, have been added for the new subsurface drain. As a result of these changes, the underdrains/blind drains calculation of quantities sheet has been revised and a new calculation of quantities sheet for subsurface drains has been created. Both of these sheets have been attached to this memorandum for your reference. Effective with the letting date above, please use the revised and new calculation of quantity sheets for projects with subsurface drainage.

This new subsurface drainage provision also replaces a subsurface drainage project special provision (PSP) typically recommended in the geotechnical recommendations for projects with underdrains/blind drains. In some situations, this PSP also included known drain locations. With this new standard provision, Roadway Design should show known drain

MAILING ADDRESS:
NC DEPARTMENT OF TRANSPORTATION
CONTRACT STANDARDS AND DEVELOPMENT
1591 MAIL SERVICE CENTER
RALEIGH NC 27699-1591

TELEPHONE: 919-250-4128
Fax: 919-250-4119

Website: www.ncdot.org./doh

LOCATION:
CENTURY CENTER COMPLEX
ENTRANCE B-3
1020 BIRCH RIDGE DRIVE
RALEIGH NC 27610

locations on the plans in a tabular form and the PSP recommended in the geotechnical recommendations is no longer required.

The new subsurface drain detail drawing can be requested from the Standards Squad Leader, Joel Howerton, P.E. when the geotechnical recommendations recommend subsurface drains. In addition, we recommend revising the Roadway Design Manual to reflect this memorandum. If there are any questions regarding this memorandum, please contact Scott Hidden, P.E. of the Geotechnical Engineering Unit at (919) 250-4088.

Attachments: New Subsurface Drainage Special Provision
New Subsurface Drain Detail Drawing
Revised Underdrains/Blind Drains Calculation of Quantities
New Subsurface Drains Calculation of Quantities

cc: Andy Gay, P.E., Proposals and Contracts Engineer
Cynthia Perry, P.E., Plans and Standards Engineer
Ron Davenport, P.E., State Estimating Engineer
Theresa Bruton, P.E., Design-Build Project Engineer
Njoroge Wainaina, P.E., State Geotechnical Engineer
Ron Hancock, P.E., State Construction Engineer
Scott Hidden, P.E., Support Services Supervisor
Division Project Managers

MAILING ADDRESS:
NC DEPARTMENT OF TRANSPORTATION
CONTRACT STANDARDS AND DEVELOPMENT
1591 MAIL SERVICE CENTER
RALEIGH NC 27699-1591

TELEPHONE: 919-250-4128
Fax: 919-250-4119

Website: www.ncdot.org./doh

LOCATION:
CENTURY CENTER COMPLEX
ENTRANCE B-3
1020 BIRCH RIDGE DRIVE
RALEIGH NC 27610

SUBSURFACE DRAINAGE:

(7-20-10) SP8 R05

Revise the *Standard Specifications* as follows:

Page 8-13, Delete Section 815 **SUBSURFACE DRAINAGE** and replace it with the following:

Description

Construct subsurface drains, underdrains, blind drains and other types of drains in accordance with the contract or as directed by the Engineer. Install markers to locate concrete pads for drains as shown on the plans. This provision does not apply to shoulder drains.

Materials

Refer to Division 10 of the *Standard Specifications.*

Item	Section
Portland Cement Concrete, Class B	1000
Select Material, Class V	1016
Subsurface Drainage Materials	1044
Filter Fabric for Subsurface Drains, Type 1	1056
Steel Markers	1072-4
Steel Marker Paint	1080-14
Pavement Marker Paint	1087

Use Class B Concrete for concrete pads and Class V Select Material for subdrain coarse aggregate. Provide subdrain coarse aggregate for subsurface drains and subdrain fine aggregate for underdrains and blind drains.

Construction Methods

Do not leave filter fabrics uncovered for more than 7 days. Excavate trenches as necessary in accordance with the contract or as directed by the Engineer. For subsurface drains, line trench with filter fabric and overlap fabric ends a minimum of 6" on top of subdrain coarse aggregate.

Install blind drains at a depth of 4 to 6 ft below subgrade elevation. Install subdrain pipes for subsurface drains and underdrains at a depth of 4 to 6 ft below subgrade elevation unless the subgrade will be proofrolled. For subsurface drains and underdrains in subgrades that will be proofrolled, install subdrain pipes at a depth of 6 ft below subgrade elevation. Firmly connect subdrain pipes together as needed. Place perforated subdrain pipes with perforations down except for pipes in dry materials, in which case turn perforations up or use non-perforated pipes. For concrete pipes in dry materials, construct mortar joints in accordance with Subarticle 300-6(A) of the *Standard Specifications*.

Place subdrain aggregate beneath, around and over subdrain pipes such that pipes are covered by at least 6" of aggregate unless shown otherwise on the plans. Do not displace or damage subdrain pipes while placing and compacting subdrain aggregate. Lightly compact backfill material such that settlement is minimized.

Use solvent cement for connecting polyvinyl chloride (PVC) outlet pipes and fittings such as wyes, tees and elbows. Provide connectors for outlet pipes and fittings that are watertight and suitable for gravity flow conditions. Cover open ends of outlet pipes with rodent screens as shown on the plans.

Connect drains to concrete pads or existing drainage structures at ends of outlet pipes. Construct concrete pads and provide an Ordinary Surface Finish in accordance with Subarticle 825-6(B) of the *Standard Specifications*. Furnish and install steel and pavement markers at concrete pads as shown on the plans.

Allow drains to function for up to 30 days or a sufficient time as determined by the Engineer before undercutting, proof rolling or constructing embankments over drains.

Measurement and Payment

Subdrain Excavation will be measured and paid for in cubic yards. Excavation will be measured based on the trench width shown on the plans or as directed by the Engineer and the actual trench depth as determined by the Engineer. The contract unit price for *Subdrain Excavation* will be full compensation for excavating trenches and backfilling above subdrain aggregate.

Filter Fabric for Subsurface Drains will be measured and paid for in square yards. Filter fabric in a trench will be measured in place based on the subdrain aggregate width shown on the plans or as directed by the Engineer and the actual aggregate depth as determined by the Engineer. No additional payment will be made for overlapping fabric. The contract unit price for *Filter Fabric for Subsurface Drains* will be full compensation for supplying, transporting and installing filter fabric.

Subdrain Fine Aggregate and *Subdrain Coarse Aggregate* will be measured and paid for in cubic yards. Subdrain aggregate in a trench will be measured in place based on the aggregate width shown on the plans or as directed by the Engineer and the actual aggregate depth as determined by the Engineer. When subdrain aggregate is not placed in a trench, aggregate will be measured in place based on the aggregate dimensions shown on the plans or as determined by the Engineer. The contract unit prices for *Subdrain Fine Aggregate* and *Subdrain Coarse Aggregate* will be full compensation for furnishing, hauling, handling, placing, compacting and maintaining subdrain aggregate.

__" *Perforated Subdrain Pipe* and __" *Outlet Pipe* will be measured and paid for in linear feet. Pipes will be measured in place as the pipe length, including fittings, to the nearest 0.1 foot with no deduction for fittings. The contract unit prices for __" *Perforated Subdrain Pipe* and __"

Outlet Pipe will be full compensation for supplying, transporting and installing pipes, fittings and rodent screens and making joint connections.

Subdrain Pipe Outlets will be measured and paid for in units of each. Outlets will be measured as the number of concrete pads or connections to existing drainage structures. The contract unit price for *Subdrain Pipe Outlets* will be full compensation for concrete pads including furnishing concrete, constructing pads and providing and placing markers and connecting pipes to existing drainage structures including cutting into structures, removing existing paved ditches and grouting around connections.

Payment will be made under:

Pay Item	**Pay Unit**
Subdrain Excavation	Cubic Yard
Filter Fabric for Subsurface Drains	Square Yard
Subdrain Fine Aggregate	Cubic Yard
Subdrain Coarse Aggregate	Cubic Yard
__" Perforated Subdrain Pipe	Linear Foot
__" Outlet Pipe	Linear Foot
Subdrain Pipe Outlets	Each

PROJECT NO.: _____ SHEET OF

SECTION: SP

UNDERDRAINS / BLIND DRAINS

SUBDRAIN EXCAVATION (USE 6' DEPTH FOR PROOF ROLLING AND 4' DEPTH ELSEWHERE) _____ YD^3

SUBDRAIN FINE AGGREGATE (USE 3' DEPTH) ..... _____ YD^3

* 6" PERFORATED SUBDRAIN PIPE ..... _____ LIN. FT.

6" OUTLET PIPE (6 LINEAR FT. PER PIPE OUTLET) ..... _____ LIN. FT.

SUBDRAIN PIPE OUTLET (USE 1 PER 500' OF PIPE) ..... _____ EACH

EXCAVATION _____ LIN. FT. x _____ DEPTH x 0.056 = _____ YD^3

AGGREGATE _____ LIN. FT. x 3' DEPTH x 0.056 = _____ YD^3

* DO NOT USE FOR BLIND DRAIN CALCULATION.

NOTE: USE 6" SUBDRAIN PIPE UNLESS ANOTHER SIZE IS SPECIFICALLY RECOMMENDED BY THE GEOTECHNICAL UNIT.

Calculated by :
Checked by :

PROJECT NO.: _____ SHEET OF

SECTION: SP

SUBSURFACE DRAINS

SUBDRAIN EXCAVATION (USE 6' DEPTH FOR PROOF ROLLING AND 4' DEPTH ELSEWHERE) _____ YD^3

FILTER FABRIC FOR SUBSURFACE DRAINS ..... _____ YD^2

SUBDRAIN COURSE AGGREGATE (USE 3' DEPTH) ..... _____ YD^3

6" PERFORATED SUBDRAIN PIPE ..... _____ LIN. FT.

6" OUTLET PIPE (6 LINEAR FT. PER PIPE OUTLET) ..... _____ LIN. FT.

SUBDRAIN PIPE OUTLET (USE 1 PER 500' OF PIPE) ..... _____ EACH

EXCAVATION _____ LIN. FT. x _____ DEPTH x 0.056 = _____ YD^3

AGGREGATE _____ LIN. FT. x 3' DEPTH x 0.056 = _____ YD^3

NOTE: USE 6" SUBDRAIN PIPE UNLESS ANOTHER SIZE IS SPECIFICALLY RECOMMENDED BY THE GEOTECHNICAL UNIT.

Calculated by :
Checked by :

PROJECT REFERENCE NO.	SHEET NO.

STATE OF
NORTH CAROLINA
DEPT. OF TRANSPORTATION
DIVISION OF HIGHWAYS
RALEIGH, N.C.

ENGLISH DETAIL DRAWING FOR

SUBSURFACE DRAIN

SHEET 1 OF 1

815D02

NOTES:
WHEN PROOF ROLLING IS REQUIRED, PLACE PIPE FOR SUBSURFACE DRAINS A MINIMUM OF 6' BELOW SUBGRADE ELEVATION.

CONNECT PIPE OUTLET INTO DRAINAGE STRUCTURE WHEREVER POSSIBLE. IF NOT CONNECTED TO DRAINAGE STRUCTURE, PROTECT END OF PIPE BY CONCRETE PAD FOR OUTLET END OF DRAIN. PADS ARE NEEDED AT LOCATIONS WHERE PIPE IS NOT PLACED IN DRAINAGE STRUCTURE TO FACILITATE MAINTENANCE AND AID IN IDENTIFICATION. OUTLETS ARE REQUIRED EVERY 500' OR AS DIRECTED BY THE ENGINEER

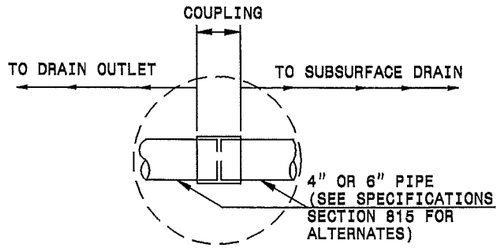

AUXILIARY VIEW

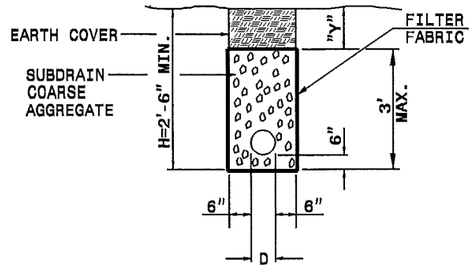

SUBSURFACE DRAIN

Y = 12" WHEN "H" IS 4'-0" OR LESS
Y = VARIABLE WHEN "H" IS OVER 4'-0"

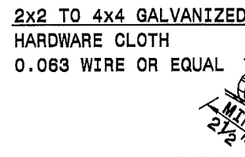

RODENT SCREEN

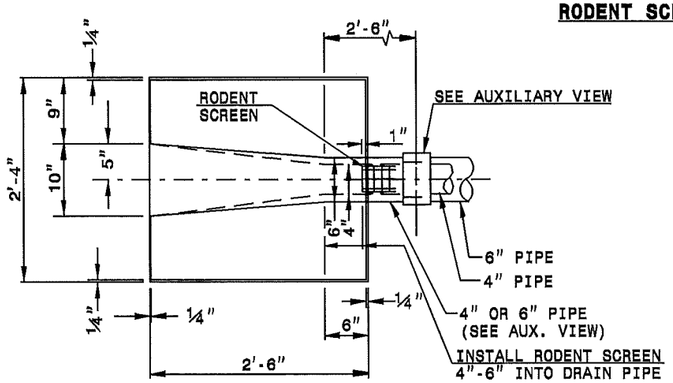

PLAN VIEW

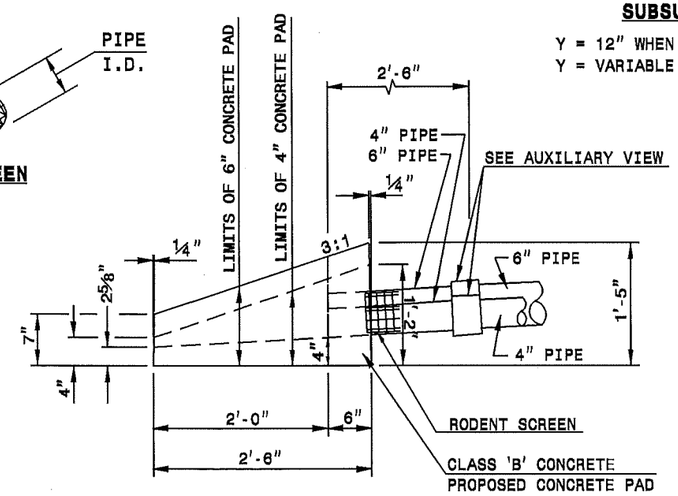

ELEVATION VIEW

SUBDRAIN QUANTITIES
EXCAV. OR COURSE AGGREGATE CU. YDS. PER FT. DEPTH/LIN. FT.
0.056

THE CONCRETE PAD CONSISTS OF 4" DRAIN 0.137 CUBIC YARDS, 6" DRAIN 0.177 CUBIC YARDS CLASS "B" CONCRETE.

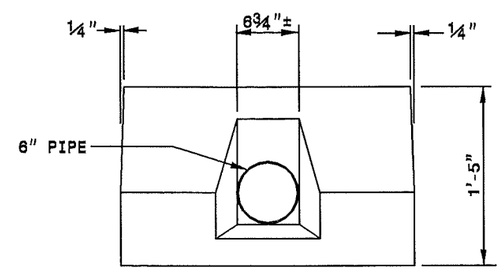

END ELEVATION VIEW

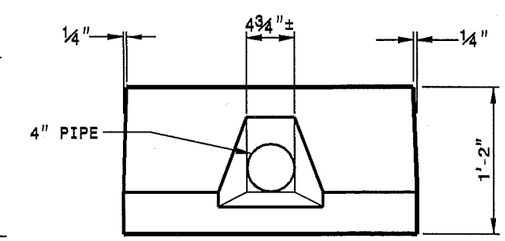

END ELEVATION VIEW

STATE OF
NORTH CAROLINA
DEPT. OF TRANSPORTATION
DIVISION OF HIGHWAYS
RALEIGH, N.C.

ENGLISH DETAIL DRAWING FOR

SUBSURFACE DRAIN

SHEET 1 OF 1

815D02

24-MAR-2010 07:57
s:\contracts\special details\erisward\stds\06' stds to special details\81502\815d02.dgn
jhowerton AT PS237501

PROJECT SERVICES UNIT
STANDARDS AND SPECIAL DESIGN
Office 919-250-4128 FAX 919-250-4119

SEE PLATE FOR TITLE

ORIGINAL BY:	STD.815.02	DATE:	
MODIFIED BY:	T.SPELL	DATE:	11-10-09
CHECKED BY:		DATE:	
FILE SPEC.:	sitspell/details/815d02.dgn		