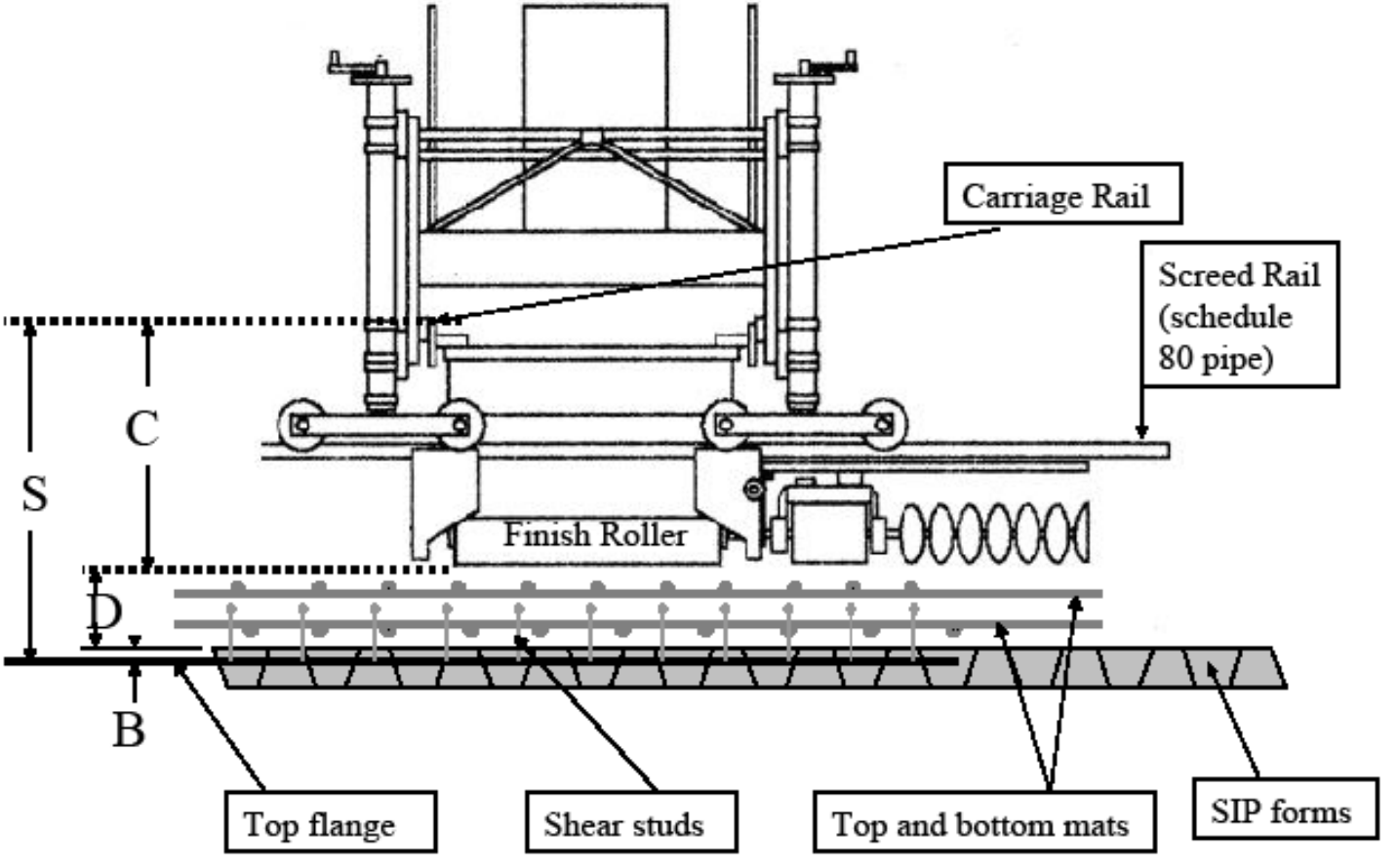
Carriage Rail
Screed Rail (schedule 80 pipe)
C
S
D
B
Finish Roller
Top flange
Shear studs
Top and bottom mats
SIP forms

Figure