SECTION 400 TEMPORARY STRUCTURES 1

GENERAL 1
400-1 DESCRIPTION 1
400-2 MATERIALS 1
400-3 PLANS 1
(A) FURNISHING PLANS 1
(B) DESIGN REQUIREMENTS FOR CONTRACTOR FURNISHED DRAWINGS 2
400-4 CONSTRUCTION METHODS 2
400-5 MEASUREMENT AND PAYMENT 2

SECTION 402 REMOVAL OF EXISTING STRUCTURES 3

402-1 DESCRIPTION 3
402-2 REMOVAL OF EXISTING STRUCTURE 3
(A) GENERAL 3
(B) REQUIREMENTS FOR MATERIALS FOR WHICH REMAIN PRPERTY OF THE DEPARTMENT 3
(C) REQUIREMENTS OF PARTIAL REMOVAL 4

SECTION 410 FOUNDATION EXCAVATION 5

410-1 DESCRIPTION 5
410-3 FOUNDATION EXCAVATION 5
410-4 COFFERDAMS 9
(A) GENERAL 9
(B) CONSTRUCTION 9
410-8 BACKFILLING AND FILLING 9
410-9 BLASTING ADJACENT TO HIGHWAY STRUCTURES 9
410-10 MEASUREMENT AND PAYMENT 10
(A) CUBIC YARD BASIS 10
411-1 DESCRIPTION 10
411-2 MATERIALS 10
(D) STEEL PIPES AND CAPS 10
411-3 PRECONSTRUCTION METHODS 10
(A) DRILLED PIER CONSTRUCTION PLAN SUBMITTAL 10
(B) PRECONSTRUCTION MEETING 11
411-4 CONSTRUCTION METHODS 11
(A) EXCAVATION 11
(B) CASINGS 11
(C) SLURRY CONSTRUCTION 11
(E) REINFORCING STEEL AND CONCRETE 12
411-5 INTEGRITY TESTING 12

SECTION 414 BOX CULVERT EXCAVATION 13

414-1 DESCRIPTION 13
414-3 FOUNDATION EXCAVATION 13
414-4 CONDITIONING CULVERT FOUNDATION 13
414-5 PUMPING 13

414-7 BACKFILLING AND FILLING ... 14
414-8 SUBSURFACE DRAINAGE AT WEEP HOLES ... 14
414-9 MEASUREMENT AND PAYMENT ... 14
FOUNDATION CONDITIONING MATERIAL – BOX CULVERT ... 15
CULVERT EXCAVATION ... 15

SECTION 416 CHANNEL EXCAVATION ... 16

416-1 DESCRIPTION ... 16
416-2 CONSTRUCTION METHODS ... 16
416-3 MEASUREMENT AND PAYMENT ... 16

SECTION 420 CONCRETE STRUCTURES ... 17

420-1 DESCRIPTION ... 17
420-3 FALSEWORK AND FORMS ... 17
(A) GENERAL ... 17
(B) FALSEWORK ... 17
(C) FORMS ... 17
(D) FORMS FOR CONCRETE BRIDGE DECKS ... 18
(E) FALSEWORK AND FORMS OVER OR ADJACENT TO TRAFFIC ... 18
420-4 PLACING CONCRETE ... 18
420-5 PUMPING CONCRETE ... 19
420-6 SLUMP TESTS ... 21
420-7 PLACING CONCRETE IN COLD WEATHER ... 21
420-8 CONSTRUCTION JOINTS ... 21
420-10 EXPANSION JOINTS ... 21
420-11 DRAINS IN WALLS AND CULVERTS ... 22
420-12 ANCHOR BOLTS AND BEARING AREAS ... 22
(A) ANCHOR BOLTS ... 22
(B) BEARING AREAS ... 22
420-13 ADHESIVELY ANCHORED ANCHOR BOLTS OR DOWELS ... 22
420-14 PLACING AND FINISHING BRIDGE DECKS ... 22
(A) PLACING CONCRETE ... 22
(B) FINISHING ... 23
420-15 CURING CONCRETE ... 25
420-16 REMOVAL OF FALSEWORK AND FORMS ... 25
420-17 SURFACE FINISH ... 25
420-18 EPOXY COATING ... 25
420-19 PROTECTION OF SUBSTRUCTURE CONCRETE FROM RUST STAINS ... 26
420-20 PLACING LOADS ON STRUCTURE MEMBERS ... 26
TECHNICIAN'S CHECKLIST PRE-DECK POUR ... 27

SECTION 422 BRIDGE APPROACH SLABS ... 36

422-1 DESCRIPTION ... 36
422-3 CONSTRUCTION METHODS ... 36
422-4 MEASUREMENT AND PAYMENT ... 36

SECTION 425 FABRICATING AND PLACING REINFORCEMENT ... 37

425-1 DESCRIPTION ... 37

425-2 MATERIALS ... 37
425-3 PROTECTION OF MATERIAL ... 37
425-4 PLACING AND FASTENING ... 38
425-5 SPLICING ... 38
REINFORCING BARS, STANDARD HOOKS AND BAR SUPPORTS ... 39

SECTION 430 ERECTING PRESTRESSED CONCRETE MEMBERS ... 42

430-1 DESCRIPTION ... 43
430-2 MATERIALS ... 43
430-3 HANDLING AND STORAGE ... 43
430-5 BEARINGS AND ANCHORAGES ... 43
430-6 ERECTION AND INSTALLATION ... 44
430-7 PAINTING ... 44

SECTION 440 STEEL STRUCTURES ... 45

440-2 MATERIALS ... 45
440-3 HANDLING AND STORING MATERIAL ... 46
440-4 BEARINGS AND ANCHORAGES ... 46
440-5 STRAIGHTENING BENT MATERIAL ... 46
440-6 FIELD ERECTION ... 46
440-7 FIELD WELDING ... 47
NCDOT FIELD WELDER CERTIFICATION PROGRAM ... 47
WELDED JOINTS – STANDARD SYMBOLS ... 49
... 49
IDENTIFICATION OF ARROW SIDE ANDO THER SIDE OF JOINT ... 50
440-8 CONNECTIONS USING HIGH STRENGTH BOLTS ... 51
RECOMMENDATIONS FOR USING SKIDMORE WILHELM ... 52
440-9 SURFACE PREPARATION AND PROTECTION OF UNPAINTED STRUCTURAL STEEL ... 52
440-10 MEASUREMENT AND PAYMENT ... 52

SECTION 442 PAINTING STRUCTURAL STEEL ... 53

442-2 MATERIALS ... 53
442-5 PROTECTION OF WORK ... 53
442-7 SURFACE PREPARATION ... 53
442-8 PAINT SYSTEMS ... 53
442-9 APPLICATION OF PAINT ... 53
(B) APPLICATION CONDITIONS ... 54
(D) MIXING PAINT ... 54
442-11 FIELD PAINTING ... 54

SECTION 450 PILES ... 55

450-1 DESCRIPTION ... 55
450-3 CONSTRUCTION METHODS ... 55
(B) PILE INSTALLATION ... 55
(D) DRIVEN PILES ... 55
(F) PILE DRIVING ANALYZER ... 56

450-4 MEASUREMENT AND PAYMENT 57
PILE DATA FORM 58
PILE DRIVING EQUIPMENT DATA FORM 59
..... 59

SECTION 452 SHEET PILE RETAINING WALLS 61

452-1 DESCRIPTION 61

SECTION 460 BRIDGE RAILING 61

460-1 DESCRIPTION 61
460-3 CONSTRUCTION METHODS 61
(A) METAL RAIL 61
(B) PIPE RAIL 61
(C) CONCRETE BARRIER RAIL 62

SECTION 462 SLOPE PROTECTION 62

462-1 DESCRIPTION 62
462-3 CONSTRUCTION METHODS 62

TECHNICIAN'S CHECKLIST PILE DRIVING 63

TECHNICIAN'S CHECKLIST SUBSTRUCTURES 64

TECHNICIAN'S CHECKLIST SUPERSTRUCTURE 65

FINAL INSPECTON CHECKLIST 66

NOTICE OF NEW STRUCTURE COMPLETION 67

RESIDENT ENGINEER'S NOTICE OF VERTICAL CLEARANCE CHANGE 70

DIVISION 4
MAJOR STRUCTURES

SECTION 400
TEMPORARY STRUCTURES

GENERAL

The provisions of this section of the Specifications will be supplemented by plans and Special Provisions except in unusual circumstances. When the contract requires a temporary structure, the plans, Special Provisions, and Specifications must be carefully studied and the requirements and responsibilities of the Contractor and the Department be fully discussed at the preconstruction conference.

400-1 DESCRIPTION

Temporary structures are required when it is necessary to maintain traffic through a construction site and it cannot be maintained on the existing facility. Although the temporary structure will be removed after completion of the new structure, quality of workmanship and compliance with Specification requirements will be the same as for permanent construction.

Prior to placing traffic on the temporary structure, the appropriate Bridge and Roadway Construction Engineers are to inspect the completed work to assure compliance with contract requirements.

400-2 MATERIALS

This article provides that materials not covered by Division 10 of the Standard Specifications may be used, provided approval for their use has been obtained from the Engineer before the materials are used. As used in this article, the “Engineer” shall be the State Bridge Construction Engineer. Conditions of any used materials including previously drilled holes or damage to the materials should be indicated in the submittal. Previously used material shall be inspected and approved by Materials & Tests personnel prior to use.

400-3 PLANS

(A) FURNISHING PLANS

When the project plans furnished by the Department include plans for the structure, the Contractor may proceed with the work as with any other contract item.

When the Contractor furnishes plans of his own design for the structure, he shall submit the plans and design calculations to Structure Design with a copy to the Resident Engineer. New bolts are required on critical connections, which must be identified on the Contractor’s submittal. All of the requirements of Section 1072, except for domestic origin, must be adhered to regarding certifications for the new bolts.

No work shall be started on the temporary structure until the Contractor's plans and design calculations have been approved by the State Bridge Design Engineer. No modifications in the plans will be permitted unless the Contractor submits revised plans and design calculations in the same manner as his original temporary structure plans.

(B) DESIGN REQUIREMENTS FOR CONTRACTOR FURNISHED DRAWINGS

The Project Special Provisions or the plans will show the minimum design load carrying capacity, dimensions, grades, and alignment of the temporary structure. If the temporary structure is over another roadway, the special provisions will show the minimum vertical and horizontal clearances required. The Resident Engineer shall check to see that the plans and design calculations the Contractor is submitting have been prepared by a North Carolina registered Professional Engineer and that they are complete and detailed before he transmits them to the State Bridge Design Engineer.

400-4 CONSTRUCTION METHODS

Temporary structures shall be constructed according to approved plans. Before traffic is placed on the structure, the Contractor must submit a written statement provided by a North Carolina Registered Professional Engineer, certifying that the erected structure complies with the accepted detailed drawings. The Bridge Construction Engineer must also complete an inspection of the bridge and advise that the workmanship is acceptable.

It is the responsibility of the Contractor to maintain the temporary structure, in such a manner that it will adequately and safely carry traffic during the entire period for which it is required. It is the responsibility of the Resident Engineer to periodically inspect the structure and its approaches to see that these requirements are fulfilled. If a hazardous condition is found on the temporary structure, the Resident Engineer may suspend all other structure work until the hazardous condition has been corrected.

The Resident Engineer should consult the Bridge Construction Engineer and/or the Division Engineer before suspending the other work unless correction of the hazardous condition requires immediate attention.

The Contractor shall submit a request to place equipment on spans for cases in which equipment will be staged on the bridge for construction activities or if off-loaded construction equipment will be walked across the bridge. This plan should be comprehensive with gross equipment weight, axle spacing/weight per axle, schematic showing location of equipment (for cranes, pump trucks, etc. staged on the bridge) and will be submitted for approval to the Engineer of Record for the temporary structure. The subsequent letter of acceptance / recommendation from the design engineer shall be forwarded to the Resident Engineer prior to equipment being placed on the temporary structure.

400-5 MEASUREMENT AND PAYMENT

On the partial payment estimate for the month in which any required temporary structure work is performed, a percentage of the lump sum bid based on the bid price less the estimated cost of maintenance and removal of the temporary structure should be allowed. Normally, 90 percent of the lump sum price is allowed for construction of the temporary structure. Ten percent of the bid price is withheld for maintenance and removal costs. The withheld portion of the bid price shall be included on the partial estimate for the month in which the temporary structure is satisfactorily removed.

Any asphalt wearing surface on a temporary structure shall be considered incidental to the temporary structure pay item.

SECTION 402
REMOVAL OF EXISTING STRUCTURES

402-1 DESCRIPTION

It should be noted that the item "Removal of Existing Structure" consists of removal of the existing structure and any other specifically identified, existing structural components in the plans or special provisions. Removal of the existing approaches is covered under other bid items.

402-2 REMOVAL OF EXISTING STRUCTURE

(A) GENERAL

It is a requirement of these Specifications that all methods and operations used for removal of structures shall meet the approval of the Resident Engineer. In addition to the discussion of this item at the preconstruction conference, the Resident Engineer should review in detail the proposed methods of removal to be sure they comply with terms of the contract.

The Contractor shall submit to the Resident Engineer a detailed structure demolition plan outlining equipment and procedures used to remove the structure. The demolition plan shall be forwarded to the Bridge Construction Engineer for review and approval. For structures to be removed which are over jurisdictional waters, the structure shall be removed by sawing or other non-shattering methods. The demolition plan and associated work should comply with the Department's "Best Management Practices for Maintenance and Construction Activities" (BMPs).

The Resident Engineer's primary concern should be the protection of adjacent structures and property, the protection of the environment, and leaving the site of the old structure in a condition that will be safe for people and animals and will be in harmony with the surrounding terrain.

(B) REQUIREMENTS FOR MATERIALS FOR WHICH REMAIN PRPERTY OF THE DEPARTMENT

When an existing structure is to be removed, it must be inspected by the Bridge Management Unit, prior to preparation of the Special Provisions, to determine if it contains any material that would be of value to the Department. If it is determined that any of the material in the structure will be salvaged for use by the Department, then a credit, as determined by the State Bridge Management Engineer, must be given to the Federal Highway Administration for the value of the materials salvaged if the project is to be partially financed with Federal funds.

The materials to be salvaged for the Department will be shown in the Special Provisions. When materials are to be salvaged for use by the Department, the Special Provisions will identify the steps to convey these materials to Bridge Management. When materials are to be retrieved by the Department at the project site, the Resident Engineer shall require the Contractor to neatly stack the material on the right of way at locations easily accessible for loading on the Department's trucks. The Resident Engineer shall then notify the Division Bridge Engineer in writing, listing the major components of salvage materials and that the materials are ready for removal from the project site.

In some cases, it may be to the advantage of the Department and the Contractor for the material to be removed from the structure and loaded directly on the Department's trucks. If this procedure is desirable, the work should be coordinated with the Division Bridge Engineer and

the Contractor's superintendent through the Resident Engineer. The procedure should be fully documented in the project diary and in writing to all the respective parties.

If the Contractor damages materials that are to be salvaged for the Department, the Contractor will be required to credit the project in an amount equal to the loss in salvage value. The credit amount will be determined by the State Construction Engineer.

(C) REQUIREMENTS OF PARTIAL REMOVAL

When partial removal of an existing structure is required, equipment and methods used shall be such that concrete, reinforcing steel, and other elements of the existing structure that are to remain in the completed structure will not be damaged. The use of hydraulic or compressed-air-operated hoe rams should not be allowed in deck or overhang removal operations. A careful evaluation of their proposed use in removing girders or substructure units should be made by the Resident Engineer in association with the Bridge Construction Engineer before work begins.

SECTION 410
FOUNDATION EXCAVATION

410-1 DESCRIPTION

Foundations are a very important part of structure construction. If foundation material under spread footings is not adequate to support design loads, damaging settlement or overturning may occur. Therefore, the Technician should pay particular attention to the type and condition of material encountered during excavation. Comparisons of material encountered with subsurface data should be made and significant variations should be reported to the Bridge Construction Engineer for evaluation. Drilled Pier foundation requirements are listed in the Project Special Provisions. For additional information see the Drilled Pier Inspection Manual. This manual is available from the Construction Unit or the Geotechnical Engineering Unit. It can also be downloaded from the Geotechnical Engineering Unit's website.

410-3 FOUNDATION EXCAVATION

When payment for foundation excavation is on a cubic yard basis, sufficient cross sections of the undisturbed ground shall be taken to adequately establish the upper horizontal limits of the excavation. See the Records and Reports Section of this Manual.

The Resident Engineer shall review the Contractor's proposed sequence of foundation excavation and related work to ensure that no portion of the structure will be endangered by subsequent operations.

Excavation for a spread footing shall be closely observed as the work progresses. As the excavation approaches plan grade, the foundation should be carefully examined to determine whether the material at plan grade is adequate for the design load shown on the plans. When there is any doubt as to adequacy of foundation material, the Bridge Construction Engineer should be requested to evaluate the material. The final excavation work on all foundations shall be done with considerable care. The last few centimeters (inches) of foundation excavation in materials with low bearing qualities shall be removed in such a manner that the surface of the completed foundation will remain undisturbed. Final grading should be done just prior to placing the concrete. In preparing foundations for harder materials, care should be exercised to prevent overdrilling and overshooting of good rock, which results in lowering the footings. Extra excavation, concrete, and reinforcing steel resulting from a lowered foundation shall be furnished by the Contractor at no cost to the Department unless the lowered foundation has been authorized in writing by the Resident Engineer.

It should not be necessary to raise or lower footings supported by foundation piles since the elevations are usually set to provide desired cover over top of footings. Plan elevations for spread footings are approximate only and are based on available subsurface data; therefore, it may be necessary to lower footings to obtain adequate foundations. Footing elevations for highway and railway separation bridges may be set to provide desired cover below adjacent ditch lines or for future construction and should not be raised without approval of the Bridge Construction Engineer. When a foundation is either raised or lowered with respect to plan elevation, the authorization for the change shall be documented. The name of the person giving the authorization and the date shall be noted in the structure pay record book. See Records and Reports section of this Manual.

When footings are designed for rock foundations, the plans usually specify that the footings are to be "keyed into rock." Footings are "keyed into rock" for scour protection and

desired elevation and may be designed to transfer lateral forces to the rock. Therefore, care should be exercised to make a proper excavation for this type of construction.

The following sketch illustrates rock foundations:

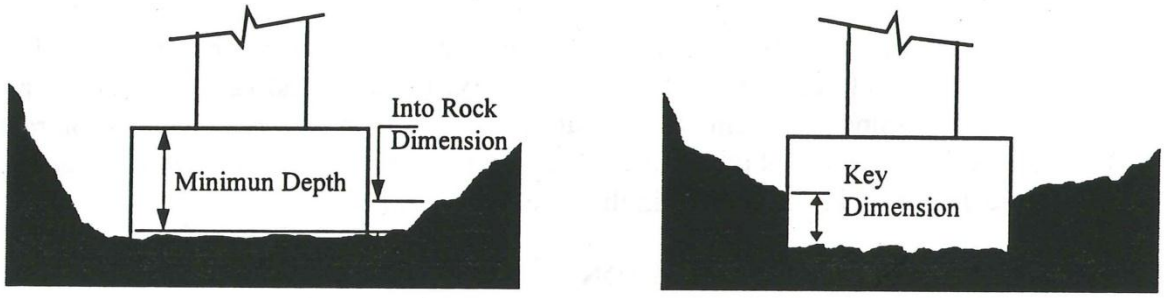

Footing Carried Into Rock **Footing Keyed Into Rock**

Foundation Investigation Utilizing Sounding Rods

The foundation elevations shown on the plans are established from subsurface investigations. The extent of these investigations varies depending upon a number of factors. A subsurface investigation extensive enough to be 100% correct would be prohibitively expensive. Changes in foundation elevation and even the type of foundation are sometimes necessary. Every Resident Engineer should have a standard driving head and a supply of 1/2-inch round steel rods and couplings for use in investigating foundations. The standard driving head and 1/2-inch round steel rods can be used to locate the elevation of rock and evaluate bearing capacity of soil foundations for spread footings. Based on correlation with plate load tests, soil foundations can be evaluated as follows:

1. Excavate to the foundation elevation to be tested.
2. Using a 2-foot free fall of the driving head, determine the number of blows required for a 12-inch penetration of the 1/2-inch rod in undisturbed soil. Several locations should be checked if the soil is not uniform.
3. To determine the approximate safe bearing value in tons per square foot, divide the number of blows required to penetrate 12 inches by 3 if the soil is dry or by 6 if the soil is wet. To convert tons per square foot to KPa, multiply by 95.76.

Keeping up with the blows per foot, the rod should be driven several additional feet to assure there is no weaker material at a lower elevation.

If there is any doubt about a foundation or if it is suspected that the foundation data shown on the plans is not correct, the Bridge Construction Engineer should be notified immediately.

The following facts should be known to anyone asking advice on a foundation:

1. Project No.
2. Station of the structure
3. Bent No. and location of footing
4. Plan grade of the footing

5. Elevation of the bottom of the present excavation
6. Bed of stream elevation, if applicable
7. Type of material passed through while excavating
8. Type of material in bottom of excavation
9. An evaluation of the material (blows per foot with 1/2 inch rod)
10. The wetness of the foundation

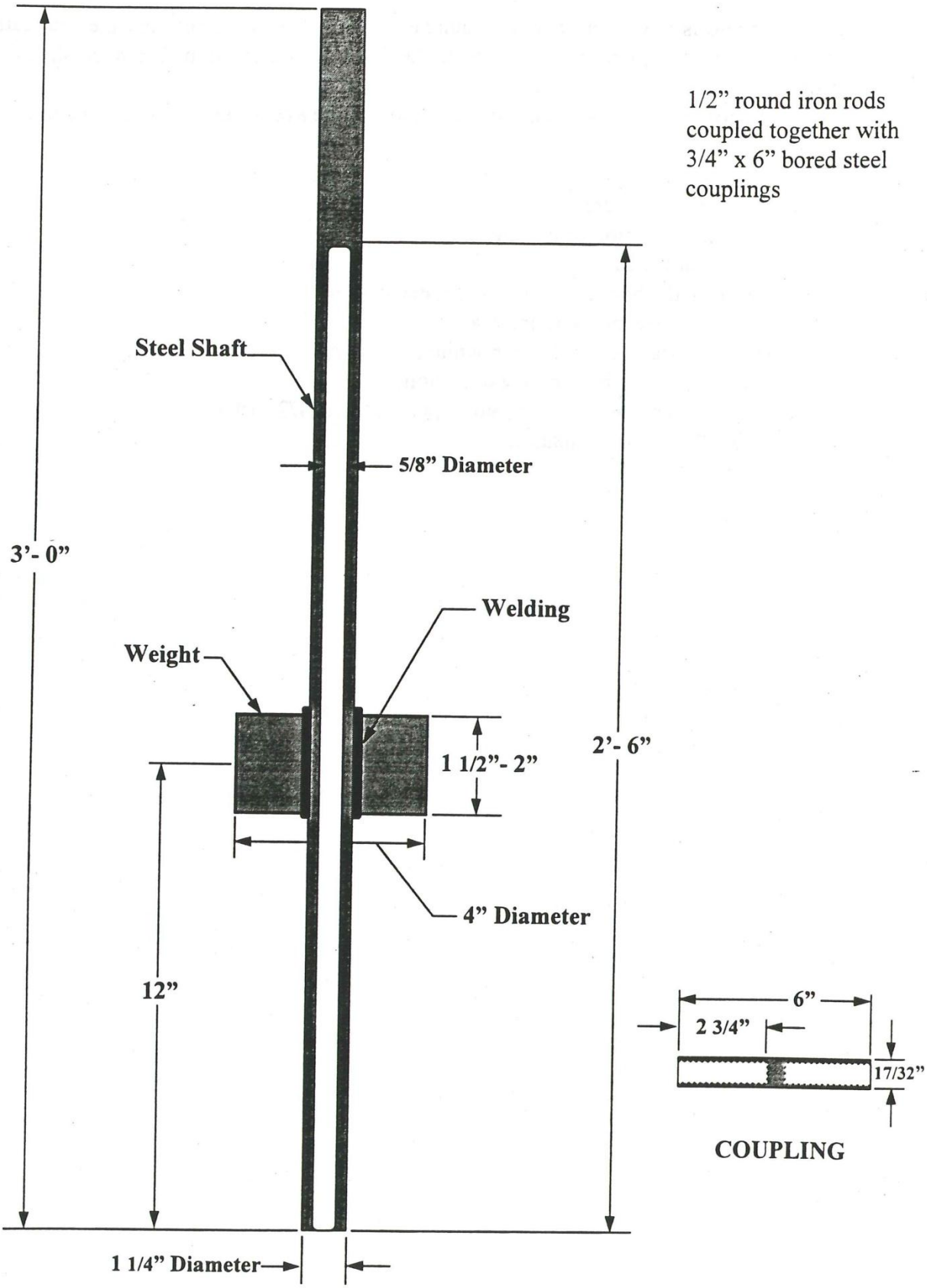

DRIVING HEAD FOR SOUNDING EQUIPMENT

WEIGHT = 16 Lbs.

410-4 COFFERDAMS

(A) GENERAL

A cofferdam is a structure, generally of a temporary nature, constructed for the purpose of keeping water and soil out of the excavation area. Normally a cofferdam is constructed before excavation begins. The usual type of cofferdam is a boxlike enclosure of sheet piling within which the excavation is made, pumped dry, and the footing constructed.

(B) CONSTRUCTION

Cofferdams must be of sufficient size to accommodate the form work, drainage details such as sumps, and clearance for batter piles. When there is no foundation seal, at least 1.5 meter (5 feet) clearance shall be provided between the proposed edge of footing and inside face of cofferdam. Except in the case of foundation seals, concrete is not to be cast in contact with sides of cofferdams.

Except for shoring adjacent to a travel way, shoring constructed in water 1.5 meters (5 feet) or deeper, or when required by a Special Provision, or any permitting agency, submission of drawings for acceptance of cofferdams or shoring is not required. When the contract requires that drawings for a cofferdam or shoring be designed by a Professional Engineer and/or accepted by the Department, no deviations from the accepted drawings will be permitted.

Cofferdams are the responsibility of the Contractor. The Resident Engineer should notify the Contractor of any inadequacy he thinks may exist in the Contractor's work and this notification should be documented. If the cofferdam proves to be inadequate, the Resident Engineer may require the cofferdam to be repaired or replaced at no expense to the Department.

410-8 BACKFILLING AND FILLING

Backfill shall be placed to provide adequate drainage as soon as practicable, but no sooner than 24 hours from the time of placing footing concrete and the concrete attains a minimum compressive strength of 1500 psi. When spread footings are cast on foundation material other than rock, and the bottom of footing is above the ground water table, ditches or dikes shall be constructed around the excavated area to prevent surface water from draining into the excavation until backfilling is completed. Care should be given to the sequence and method of placing backfill. For unusual situations, the Bridge Construction Engineer should be consulted prior to beginning the work.

410-9 BLASTING ADJACENT TO HIGHWAY STRUCTURES

If the listed blasting criteria cannot be met, the Contractor shall be required to submit a blasting plan. The blasting plan should be forwarded to the Geotechnical Unit for evaluation. The Geotechnical Unit will also provide independent monitoring with the seismograph.

410-10 MEASUREMENT AND PAYMENT

(A) CUBIC YARD BASIS

The third paragraph of this subarticle establishes the lower limits for measurement when the foundation material is other than rock and when it is rock.

When the foundation material is other than rock, the lower limits for measurement should be a horizontal plane at the plan bottom of footing elevation or at the elevation directed by the Resident Engineer.

When the foundation material is rock, it is recognized the foundation may be irregular in elevation. This is especially true when blasting is required. For a rock foundation, the lower limits for measurement will be the actual elevations established after the foundation has been approved by the Resident Engineer.

Regardless of the type of foundation material, any excess excavation due to carelessness or negligence of the Contractor is not to be measured for payment. When this is the case, the nonpayment should be explained in writing to the Contractor and documented in the structure pay record book.

This provision should not restrict or inhibit the Resident Engineer from requiring the Contractor to remove material from below the elevation of the bottom of the footing as established by the plans when it is necessary to obtain an adequate foundation. It does require that these directions be documented.

The lower limits of the foundation should be recorded in the structure pay record book.

SECTION 411
DRILLED PIERS

411-1 DESCRIPTION

Drilled piers or drilled shafts are cast-in-place, below ground structural elements. Drilled piers are used as bridge, sign, and signal supports.

When determining if the material being drilled is rock, the machine must be operating at full crowd with a rock auger. Full crowd is the maximum downward force a machine is capable of providing. The method of determining full crowd varies with the drill type. The method of determining full crowd should be discussed at the drilled pier preconstruction meeting.

411-2 MATERIALS

(D) STEEL PIPES AND CAPS

Removable caps for CSL tubes must be either expansion plugs, threaded caps or flexible pvc caps with adjustable clamps.

411-3 PRECONSTRUCTION METHODS

(A) DRILLED PIER CONSTRUCTION PLAN SUBMITTAL

The drilled pier construction must be submitted and approved prior to beginning any work on the drilled piers. Once approved, the construction plan must be followed. If site or any other conditions necessitate a change from the approved plan, the proposed revisions must be

submitted and approved prior to proceeding with the changes. The plan should address how rock cores are removed. If blasting is allowed for core removal, the charge must be placed in a hole in the core. Charges will not be allowed in the seam between the core and shaft wall.

(B) PRECONSTRUCTION MEETING

The preconstruction meeting should not occur until the driller mobilizes to the project. The driller's representatives at this meeting should be the actual personnel who will be performing the work. The location of all piers should be staked and referenced prior to the meeting.

411-4 CONSTRUCTION METHODS

(A) EXCAVATION

Close attention should be given to the excavation process. The inspector should have a copy of the subsurface information readily available. The type of material and the depth encountered should be compared to the borings and noted on the appropriated drill log. If conditions are encountered which are different than anticipated, the Geotechnical Operations Engineer and the Bridge Construction Engineer should be notified so that the integrity of the design may be checked. All excavations must be stabilized by casing or slurry until qualifying rock as defined by 411-1. If a dewatered pier is to be poured using the wet method, the pier should immediately be pumped full of clean water after cleaning. This prevents fines from being transported in with the ground water as the hole fills up naturally.

(B) CASINGS

Permanent casings are used where the soil material is inadequate to contain the concrete during casting or where piers are cast through water. Although the permanent casings are shown on the plans, they may be added or deleted at the discretion of the Engineer. If there is a doubt on the need for permanent casings, consult the Bridge Construction Engineer. Pay particular attention the elevation of the bottom of casing elevation. A permanent casing which extends below the bottom of casing elevation on the plans cannot be raised, the shaft must be made deeper.

(C) SLURRY CONSTRUCTION

The plans should always be checked for notes on the use of slurry construction. When slurry is used on shafts in a waterway, a plan must be in place for containment of slurry. Particular attention should be paid to containment of slurry fluid and drippings from tools being removed from the shaft.

(D) CLEANING AND INSPECTION

When a Standard Penetration Test (SPT) is required by a note on plans and/or when weathered rock or soil is present at the drilled pier tip elevation, a SPT should be performed in accordance with the *Standard Specifications for Roads and Structures*. When required by a note on plans, the memo response from the Geotechnical Engineering Unit for the Contractor's Drilled Pier Construction Sequence submittal should include a note regarding the required N_{60}

SPT value to verify the Required Tip Resistance for the drilled pier. If the memo note was not included or conditions are revealed at the drilled pier tip which may require a SPT, please contact the Area Bridge Construction Engineer or the Geotechnical Operations Engineer. The N_{60} value indicated in the Geotechnical Engineering Unit memo response is valid when the Drilled Pier Subcontractor is performing the SPT using a safety hammer, rope, and cathead system. If the Drilled Pier Subcontractor is using a hydraulic automatic SPT hammer, the value stated in the memo should be multiplied by 3/4 to determine the required SPT value using that system. For example, if the required N_{60} value in the memo is stated as "100 blows in the first foot of the drive" and the subcontractor is using an automatic SPT hammer then the revised required SPT value is 75 blows in the first foot of the drive.

(E) REINFORCING STEEL AND CONCRETE

Rebar, spacers, and CSL tubes should be spaced evenly as possible to prevent voids from developing where these items are crowded together and concrete has a difficult time flowing through the openings. Particular attention should be placed on any areas containing vertical overlapping or mechanical splices as the openings will be reduced even further in these areas.

Even though rebar cages have spacers, they should be tied off at the top of the shaft in the correct location. The cage should be tied off even when temporary casing is used. This keeps the cage in the proper position as long as possible and the concrete helps hold it in position after it is cut loose. As soon as the temporary casing is removed, the alignment of the cage should be checked again and the cage tied off in the proper position.

When using pumps or tremie pipes on wet pours, measures must be taken to prevent water contamination of the concrete. This can be accomplished by either sealing off the bottom of the pipe or running a "pig" through the pipe to separate the concrete from the water. If sealing the bottom of the tremie pipe, the pipe should be checked to ensure watertightness once it has been lowered to the bottom of the pier. If a pig is used, it should be placed in the top of the tremie or pump pipe. If a pig is displaced before pumping or concrete placement begins, the pipe should be removed and the bottom checked for cleanliness again. If concrete escaped into the shaft, the bottom should be cleaned again. Once concrete placement begins on a wet pour, ensure that the tremie or pipe remains embedded in the concrete.

411-5 INTEGRITY TESTING

Integrity testing is performed on drilled piers when required by the plans or when deemed necessary by the Engineer. Whenever conditions arise which raise concern over the quality of the pier, the Engineer may require integrity testing. Examples of conditions which may raise concern are: suspected caving of the shaft walls, suspected water intrusion, problems with the concrete, or tremie and pump pipes which do not remain embedded in the concrete. If there is a doubt as to the need to perform an integrity test, consult the Bridge Construction Engineer. Results of integrity testing should be forwarded to the Geotechnical Operations Engineer for further evaluation. The Geotechnical Operations Engineer will determine the need for further investigation after unsatisfactory test reports.

SECTION 414
BOX CULVERT EXCAVATION

414-1 DESCRIPTION

Box culvert excavation is all excavation necessary for construction of box culverts with floor slabs. Excavation for box culverts without floor slabs will be classified as foundation excavation and channel excavation.

414-3 FOUNDATION EXCAVATION

When box culverts are constructed on compressible material, the grade line should be cambered to compensate for anticipated settlement. The amount of camber to be used depends on the height of fill and compressibility of the foundation material. When subsurface borings are available, the amount of camber will be shown on the plans. A table is included in the Pipe Installation Section of this Manual to provide some guidance in selecting the amount of camber to be used when the camber is not shown on the plans. In questionable situations, the Bridge Construction Engineer should be consulted.

In the event there has been a revision in the size, length, elevation, or location of the box culvert, sufficient cross sections should be taken to establish the upper limits of excavation. See Records and Reports Section of this Manual. The excavation quantity should be computed to aid in negotiating a revised lump sum price.

414-4 CONDITIONING CULVERT FOUNDATION

Culvert foundation conditioning is required when the material at the plan bottom of the culvert is not adequate to support the load or when other conditions exist that in the judgment of the Engineer justifies use of this material. When crushed stone or gravel conditioning material is used, it shall be Class VI, Select Material.

The quantity of foundation conditioning material shown on the plans is indicated for bidding purposes only and is based on a thickness of approximately 12 inches. Actual thickness required should be based on conditions encountered at the site. When the entire culvert and wings can be cast on a rock foundation or on stream gravel, conditioning material is not required. The Resident Engineer should advise the Contractor as to the thickness of undercut required.

The horizontal limits for payment shall be the minimum distance beyond the outside limits of the culvert to obtain stability of the foundation conditioning. Depth of conditioning material for pay purposes shall be approved by the Resident Engineer.

Foundation conditioning should not be used to relieve the responsibility of adequately dewatering a foundation.

414-5 PUMPING

Foundations for box culverts should be drained by diverting the flowing water and dried up by pumping. Pumping during the placement of concrete or for 24 hours after the pour will not be permitted unless the pump is located in a sump outside the forms. Flowing water is not to come in contact with the fresh concrete.

414-7 BACKFILLING AND FILLING

Backfill material shall be inspected and approved by the Resident Engineer before the backfilling operation begins.

When the excavated material is unsuitable for backfill, the Contractor will be required to furnish and haul suitable material to the site and will be paid for this work in accordance with Subarticle 414-11(C) of the Specifications.

In order to reduce erosion and sedimentation, the Contractor should be required to backfill the culvert and redirect the water through it as soon as practical. Refer to the Permits in the Contract, since some environmental conditions require establishment of permanent ground cover in the proposed channel prior to redirecting flow.

Special care is required in backfilling a box culvert. Adjacent excavated slopes shall be stepped to prevent wedging action of the backfill against the culvert walls. This wedging action can cause excessive stresses in the reinforced concrete. It is most desirable to backfill up to the top of the bottom slab as soon as the edge forms are removed to prevent the possibility of scour under the slab; however, the backfill is not to be carried higher than one foot above the top of the bottom slab until the top slab has been placed, forms removed, and all of the concrete in the culvert has reached its minimum specified 28-day strength. Unsymmetrical loading caused by backfilling to a higher elevation on one side of a culvert than on the other can cause damage to the culvert and should be avoided.

Work covered by this section includes placing backfill up to the ground line existing before excavation was started.

Compaction of the backfill material shall be in accordance with the Specifications.

Construction equipment will not be permitted to cross a culvert until at least 3 feet of fill has been placed over the culvert in accordance with Subarticle 235-4(B). The Structure Design Unit should be asked to check adequacy of the design before allowing proof rollers or heavy earth moving equipment across culverts with shallow fills.

414-8 SUBSURFACE DRAINAGE AT WEEP HOLES

This article covers in detail the drainage system required for the backfill.

A drainage system is required to prevent hydrostatic pressures that could cause failure of the culvert. For this reason, special care should be taken to construct the system as specified.

414-9 MEASUREMENT AND PAYMENT

This article is self-explanatory except for “Furnishing and Hauling Backfill Material.” When this extra work is required, the quantity to be paid for will be measured in place.

FOUNDATION CONDITIONING MATERIAL – BOX CULVERT

The contract unit price for conditioning material includes all required excavation below bottom of barrel and wing footings, regardless of depth, in addition to furnishing, hauling, and placing the material.

CULVERT EXCAVATION

Each box culvert in a contract will have a separate lump sum bid price for excavation. There will be no adjustment in the bid price unless there is a revision in the size, length, elevation, or location. In the event there is a revision, cross sections should be taken and excavation quantities computed for the culvert as detailed in the original plans and as revised. These quantities are to be used in considering an adjustment in the lump sum price.

SECTION 416
CHANNEL EXCAVATION

416-1 DESCRIPTION

An item for channel excavation is included in the contract when excavation outside the limits of the other excavation items is required. It will usually be included when there is a channel change under a bridge or at the site of a box culvert without floor slab.

The excavated material when suitable shall be used as backfill or embankment and when not suitable shall be disposed of as directed by the Resident Engineer.

416-2 CONSTRUCTION METHODS

The Contractor should be made aware that the existing ground is not to be disturbed until adequate cross sections have been taken to establish the upper limits of the excavation.

Excavation outside the horizontal or lower limits established by the plans or in writing by the Resident Engineer will not be measured for payment.

416-3 MEASUREMENT AND PAYMENT

Excavation outside the horizontal or lower limits established by the plans, or as directed in writing by the Resident Engineer, will not be measured for payment. Care should be taken to ensure that the four “no measurement” conditions in this article are properly applied.

Payment at the cubic yard price established in the contract will be full compensation for this item. If the contract does not have a cubic yard price established for “channel excavation” then payment for various other items in the contract will be full compensation for any channel excavation required outside the limits of other excavation items.

SECTION 420
CONCRETE STRUCTURES

420-1 DESCRIPTION

This section covers construction of all cast-in-place concrete elements of structures. See Article 1000-4 of the Specifications for the Contractor's responsibility for concrete mix designs.

420-3 FALSEWORK AND FORMS

(A) GENERAL

Unless otherwise required in the plans or Special Provisions, the Contractor is not required to submit falsework and form plans for approval except for bridge superstructures. The plans and special provisions should be carefully checked to determine if falsework and form plans are required for structure elements other than superstructures. Generally, they are required for caps of "hammer head" bents, large box culverts, and arch culverts. Erection of falsework and forms for bridge superstructures is not to be started until 8 detailed sets of plans have been submitted by the Contractor for review, comments, and acceptance by the State Bridge Design Engineer. In no case is concrete to be cast unless the falsework and forms are in accordance with the approved plans.

Approval of falsework and form plans does not relieve the Resident Engineer of responsibility of seeing that the falsework as actually installed is safe and does not relieve the Contractor of full responsibility for the work.

In grading forms and falsework, allowance must be made for settlement in the falsework due to compression of the joints and also the falsework and beam deflections.

Sufficient "telltales" should be provided to quickly and easily show any settlement of the forms when loaded. Required adjustments must be made while the concrete is still plastic. No adjustments shall be made after the concrete has taken its initial set.

(B) FALSEWORK

Falsework may be supported on sills, piles, or portions of the completed structure when permitted in writing by the Engineer. Sills should be used only when supported on firm material that can support the applied loads without appreciable settlement. When settlement is anticipated, the Engineer should require jacks or other means to afford adjustment.

Falsework piles are to be driven to an adequate bearing capacity with the tips well below any likelihood of scour.

Sufficient bracing of falsework is required to resist lateral forces from flowing water and unequal loading while the forms are being filled.

(C) FORMS

Forms shall be built to the contours required in the finished concrete. They shall be rigid enough to retain these contours under the weight of the concrete with no bulging or displacement.

With few exceptions, a rubbed surface finish is not required for structure concrete. Therefore, the form surface that will be in contact with exposed concrete should be smooth and uniform in texture. Use of forms that are dented, warped, split, or otherwise damaged should not be permitted.

(D) FORMS FOR CONCRETE BRIDGE DECKS

When allowed by the plans, the Contractor may elect to use a deck forming system other than the one shown on the plans. In these instances, the Contractor is responsible for the submittal. Once the submittal has been reviewed and approved, the Contractor will submit reproducible drawings to be used for a plan revision.

(E) FALSEWORK AND FORMS OVER OR ADJACENT TO TRAFFIC

When forms and falsework present a potentially hazardous situation for traffic, the Contractor is required to make a submittal on the falsework or forming system to be used. The falsework or forms must be constructed in accordance with the approved system. Prior to casting concrete, the Contractor must provide a written certification that the system complies with the accepted drawings.

In addition, some projects contain a Special Provision, "MAINTENANCE AND PROTECTION OF TRAFFIC BENEATH PROPOSED STRUCTURES AT STA_____" . This Special Provision requires the Contractor to protect traffic and temporarily brace girders at prescribed locations along the project. This is to insure the stability of the girders against temporary loads and wind until the entire framework is installed and is self stabilizing, and to protect from any tools or materials which could be dropped into traffic. The Contractor should submit details and calculations for review and approval to the Structure Design Unit.

The proposed traffic protection system must at least cover the area between beams over travel lanes. Also, the overhang falsework must be left in place over traffic until the barrier rails are cast.

The lateral stability for all girders over traffic must be reviewed and provided for. In some cases, such as for prestressed concrete girders, the Contractor may provide calculations to show the girders do not need temporary bracing. In other cases such as large and / or curved plate girders, the girders will have to be erected in pairs or a temporary bracing system provided.

If this Special Provision is included in the contract, the Technician should have an approved copy before allowing the Contractor to erect the members. No separate payment is made for this work.

420-4 PLACING CONCRETE

Structure concrete is designed to carry predetermined stresses. The actual strength attained in the structure is not only dependent on proper proportioning and mixing but also on handling and placement in accordance with the Specifications.

Before allowing the Contractor to start casting concrete, the Resident Engineer or his Technician shall check the forms for stability, size, location, and cleanliness. The reinforcing steel shall be checked for size and position. The results of these checks should be recorded in the Technician's Daily Report. He shall make sure that the Contractor has adequate personnel and equipment at the site to cast the concrete.

Any concrete found to be honeycombed, cracked, or otherwise defective shall be called to the Bridge Construction Engineer's attention prior to repair.

Detailed requirements for the pumping of concrete are covered in Article 420-5 of the Specifications. During placement of concrete, the following check list is suggested:

1. Will the concrete be placed within the time limits stated in Subarticle 1000-4(E)?
2. Is concrete temperature within the Specification limits?
3. Does the method of placement prevent segregation and displacement of reinforcing steel?

4. Does the concrete meet air and slump requirements?
5. Is the concrete dropped more than 5 feet?
6. Is the concrete deposited as near as possible to its final position?
7. Is concrete being vibrated sufficiently for adequate consolidation?
8. Is the concrete placed in continuous horizontal layers?
9. Is maximum layer thickness 12 inches when there are horizontal layers of reinforcing steel?

When concrete arrives on the job with an air content below the specified level by more than the allowable tolerance, the supplier may use additional air entraining admixture if the following conditions are met:

1. The admixture is the same brand and type as originally introduced at the plant unless otherwise permitted by the Engineer.
2. The admixture, if liquid, is measured into a bucket containing 1 gallon of water. The admixture, if prepackaged powder, is added according to the manufacturer's recommendation.
3. The admixture, if liquid, is thoroughly mixed with the water and the mixture, is then directed to the front of the drum with the drum momentarily stopped.
4. The maximum allowable water-cement material ratio of the concrete is not exceeded with the addition of water and admixture solution.
5. The concrete is then mixed 30 revolutions at mixing speed.
6. A record is kept by project personnel of the brand, type, and quantity of admixture and of water added clearly noted on the sample card and batch ticket.

This policy should apply only to trucks already on site and en route. However, air adjustments may be necessary on subsequent loads due to variations in raw materials at the plant.

420-5 PUMPING CONCRETE

Pumped concrete is defined as concrete that is conveyed by pressures through either rigid pipe or flexible hose and discharged directly into the desired location. Pressure is applied by piston pumps, compressed air, or squeeze pressure. Rigid pipes and flexible hoses are available in sizes from 3 to 8 inches in diameter with 4 inches being the most common size used.

The success of good pumped concrete is dependent upon several items. Therefore, in considering a request by a Contractor to pump concrete and before beginning any actual work, the following items must be considered and where appropriate complied with:

1. There must be a steady supply of pumpable concrete. This will require that the concrete contain uniform aggregates that are properly graded, consistently batched materials, and the thorough mixing of the concrete.
2. Frequent moisture tests of the aggregates will be required to ensure that a uniform slump is maintained.
3. The concrete pump must be located as near the placing area as practical and the entire area around the pump must be of sufficient strength to support the concrete delivery trucks. Only in extreme situations will pumps be permitted on completed bridge decks. If such a request is made, it shall be referred to the State Bridge Design Engineer for review and approval.
4. Lines from the pump to the placing area must be laid out with a minimum of bends so the line friction will be held to a minimum.
5. There must be direct communications maintained between the pump operator and the placing crew.

6. When pumping concrete for bridge decks and culvert slabs, the line shall be firmly supported above the reinforcing steel to prevent the transmission of vibrations through the reinforcing steel into the freshly placed concrete.
7. The rate of placing must be estimated so the concrete can be ordered at an approximate delivery rate that will ensure a continuous operation.
8. Prior to ordering concrete, the pump should be started and operated to ensure that it operates properly.
9. If a grout mortar has been pumped into the line or a "slick pack" added to provide lubrication for the concrete, the mortar or concrete containing the "slick pack" shall not be incorporated into the structure.
10. Usually when there is enough concrete in the line to complete the unit being cast, the pump is stopped and a "go devil" inserted in and forced through the line to clear it out. The remaining concrete shall be ejected in a manner that will prevent contamination of the concrete or separation of the materials.
11. All samples of concrete that are used in the making of slump and air tests and test cylinders shall be taken from the discharge end of the pump line. Any request to deviate from this requirement shall be referred to the State Construction Engineer.

Prior to the first concrete pumping operation on a project, the Resident Engineer shall meet with the Contractor to review his plan of pumping to ensure that the items listed above have been considered and adequate preparations made. The meeting should include the foreman in charge of the work, the pump operator, a representative of the concrete supplier, the appropriate project personnel, the Section Materials Specialist, and the Bridge Construction Engineer. After the first use of a concrete pump on a project, a subsequent meeting should be held if conditions encountered warrant.

When pumping is utilized in the placement of deck concrete, the following guidelines should be observed:

1. A minimum of three Technicians should be present on a pour in which a pump is used for placement. They should be used for the following:
   a. On the bridge deck to check placement, depths, finishing, straight edging, curing, etc.
   b. Documentation of batch tickets, frequency of tests, and assistance of testing.
   c. Testing including chase, pot, temperature, and slump as required at the pump and on the deck.
2. On the first load, the Technician should run a chase, pot, and slump from the truck after the Contractor adjusts the water. At the pump discharge, before vibration, the Technician should run a pot and slump for correlation of losses. Inasmuch as losses are variable, the Technician should run additional correlation tests at cylinder time, changing spans, or if a variation in slump or excessive boom angle is noticed.
3. To account for pump losses, concrete should be placed into the pump with a maximum slump of 4 inches and 5.5 to 7.5% air. Concrete which falls within these limits may be accepted at the truck unless the correlation indicates that the discharged concrete will be outside the acceptable ranges. Rejection of concrete must be based from samples obtained from the pump discharge. As always, samples used for cylinders must be obtained from the pump discharge.
4. The concrete company QC person may add an air entrainment agent to the trucks only until adjustment can be made at the plant.
5. Wet epoxy coated steel is slick. To assist the Technicians in obtaining samples, the Contractor should provide a plank walkway from the pump discharge across the mat of steel.

In conclusion, it should be remembered that if you have not had experience in the pumping of concrete or if you have any questions concerning the pumping of concrete, you should contact the Bridge Construction Engineer for help.

420-6 SLUMP TESTS

Comparative air content, slump, and compressive strength tests shall be performed on all FHWA projects for Independent Assurance purposes. The Resident Engineer should communicate all concrete pours with the Section Materials Specialist.

420-7 PLACING CONCRETE IN COLD WEATHER

Concrete is not to be placed when the air temperature in the shade is below 35° F without special permission from the Resident Engineer. Extreme care shall be exercised in granting such permission especially when thin concrete sections such as slabs are involved.

When concrete is cast under the cold weather conditions set forth in the Specifications, strict adherence to the special batching and protection requirements is necessary.

It is very important that the temperature of the ingredients of the concrete mix be kept below 150° F. If this temperature is exceeded, a flash set may occur before the concrete can be properly placed and finished.

The most common method of protecting concrete during cold weather is by use of insulation. The type of insulation materials used are identified in the comprehensive approved product listing and must be approved by the Materials & Tests Unit for each project. Insulation on forms should be in place before concrete is deposited. Thin sections such as bridge deck overhangs must be insulated on the bottom forms as well as the top surface. When insulation is to be placed on top of the concrete surface such as for bridge decks and culvert slabs, it is extremely important that the insulation be placed as soon as the surface has set sufficiently to support the insulation without damaging the surface. This will retain most of the heat from initial hydration of the concrete.

Ice, snow, and frost must be removed from the forms, reinforcing steel, and any other surfaces that the concrete will come in contact with just before concrete is placed.

Concrete is not to be cast on frozen soil.

420-8 CONSTRUCTION JOINTS

Construction joint locations will be shown in the plans. Unless shown as a permitted construction joint, the elimination or addition of construction joints will not be allowed without written permission of the Bridge Construction Engineer.

Construction joints are provided to simplify forming requirements, prevent excessive side pressures on the form, and reduce shrinkage stresses.

Before placing fresh concrete, surfaces of construction joints shall be properly cleaned, prepared, and wetted in accordance with the Specifications.

420-10 EXPANSION JOINTS

Seal all expansion joints with a low modulus silicone sealant in accordance with Article 1028-4. As an option, the Contractor may completely remove the filler material in lieu of sealing.

420-11 DRAINS IN WALLS AND CULVERTS

The location of drain holes in structure units is shown in the plans. Although the Resident Engineer has authority to deviate from the plan requirements for drains, adequate drainage is very important and should be carefully considered when changes are proposed. The Bridge Construction Engineer shall be consulted before making a change.

420-12 ANCHOR BOLTS AND BEARING AREAS

(A) ANCHOR BOLTS

Extreme care is required in setting anchor bolts to assure proper fit of the structural steel or bearing assemblies. To avoid errors, the bolts should be set by the Contractor's forces and then independently checked by Department personnel. When possible, locations should be checked by measuring from previously cast substructure units.

(B) BEARING AREAS

Bearing areas should be finished as smooth and level as possible while the concrete is still plastic. However, additional finishing of these areas is usually required after the concrete has hardened and anchor bolt templates are removed to attain a suitable bearing surface.

Bridge seat elevations shall be rechecked immediately after casting of a cap is complete to assure form and falsework settlement has not occurred.

420-13 ADHESIVELY ANCHORED ANCHOR BOLTS OR DOWELS

Adhesive anchoring must utilize an approved system. The Contractor should supply manufacturer’s literature for the system being utilized. Unless otherwise stated in the plans, follow all of the manufacturer’s recommendations for the use of the system. Proper preparation of the hole prior to setting the adhesive is critical to the performance of the system. The plans will specify whether to test the embedded bolt or dowel.

420-14 PLACING AND FINISHING BRIDGE DECKS

Other articles concerning structure concrete construction covers a variety of concrete structure work in addition to bridge floors. Since bridge floors require more durable concrete than other structure units, certain factors are treated in more detail in this article. A suggested procedure for grading overhang forms, headers, concrete buildups over beams, and screeds for continuous span bridges is included in the Engineering Control Section of this Manual. Similar procedures are to be used for grading simple span bridges.

When casting deck concrete in Divisions 5, 7, 9-14, the class AA concrete must contain either fly ash or slag. This requirement is stated in a plan note on the general drawings.

A pre deck pour meeting shall be held prior to the first deck pour on a project. The Contractor, Resident Engineering staff, Materials and Tests, concrete supplier, and the concrete pumping company should all be in attendance at this meeting. A recommended pre-pour agenda is included at the end of this section for concrete and latex modified concrete deck pours.

(A) PLACING CONCRETE

Just before casting a floor slab, the size and placement of reinforcing steel and the line and grade of forms should be carefully checked. “Dry runs” should be made with the screed to

assure that it is in good working order. Also, measurements should be taken from the screed rail to the forms as a check on the required slab thickness. Anticipated beam deflection must be taken into consideration in this check.

Prior to beginning the pour, the Contractor shall make a dry run of the screed over the deck in the presence of the Technician. A copy of this procedure is included at the end of this section as a part of the pre-pour agenda. The deck thickness and cover over the steel shall be checked and recorded in the Technician's workbook. As a minimum, these checks should be made 18 inches from the curb line, the centerline of each lane, and at the centerline of 2-lane bridges. The checks should be performed at the ends, quarter points, and center of each span.

During the pour, the Technician should again check and record deck thickness and concrete cover immediately behind the screed. The locations for these checks should be as near as possible to the locations which were checked during the dry run. In order to perform these checks, the Technician will need a device which will measure both thickness and cover.

An example of such a device is shown.

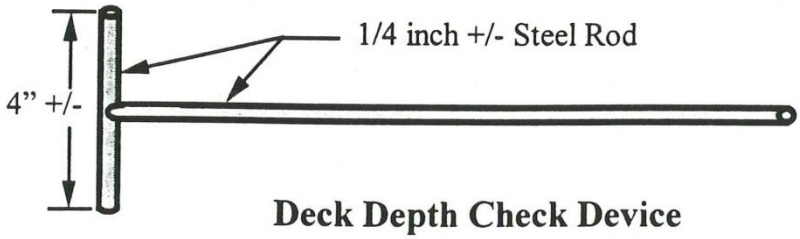

Deck Depth Check Device

Note: This device can be made from a piece of CHCM. Cut the CHCM to the desired length, straighten the end legs, and remove the other legs. An alternate method of construction would be to cut and tack weld two pieces of form tie.

Should the checks indicate variations from plan dimensions in excess of 1/2 inch, the Contractor shall be notified and shall take corrective actions. The Technician should document what corrective actions were taken.

The Resident Engineer should assure himself that all of the equipment to be used in placing the concrete is adequate and in good working order before permitting the Contractor to begin placing concrete.

When using longitudinal screeds, the first interior bay should be loaded with concrete before loading the overhang. This procedure will minimize unequal beam deflections. As soon as the first overhang has been loaded and the deck concrete has been screeded beyond the second beam, the overhang shall be checked for grade. For full pour simple spans, the grade should be checked with an Engineer's level. For simple spans with multiple pours and continuous spans, the overhangs should be checked with a "preacher." Although the "preacher" does not assure exact final grades, it does assure smooth lines on the overhang. Details for constructing a "preacher" are included in the aforementioned procedure for grading overhang forms, headers, etc. If form adjustment is necessary, it should be made immediately. The other overhang should be checked as soon as it is loaded.

Uniform consistency of the concrete is necessary in order to get a good bridge floor. Variations in the amount of shrinkage can cause cracking and early deterioration of the floor.

(B) FINISHING

The most important piece of equipment used in building a good riding bridge is the screed used to finish the floor slab. The grade for the screed shall be computed accurately and set in the screed with an Engineer's level. Computation of screed grades is somewhat

complicated for continuous spans when a longitudinal screed is used. Procedures included in the Engineering Control Section of this Manual are recommended. Usually, transverse screeds that progress longitudinally along the bridge are used; however, some Contractors use longitudinal screeds on relatively short spans.

The number of passes made over the concrete with the screed should be kept to a minimum. No more than 3 passes should be needed. Immediately after the concrete is struck off by the screed, the surface must be checked by the Contractor with a 10 foot straightedge in strict conformity with Specification requirements. The procedures for using the straightedge are outlined in this section of the Specifications.

Other very important pieces of equipment used in casting bridge decks are the work bridges that will provide adequate access to the work. The Contractor shall not be permitted to begin casting deck concrete until at least 2 work bridges are at the site and adjusted to fit the supports. They should be placed in operating position as soon as possible.

Certain combinations of temperature, wind, and humidity can cause severe shrinkage cracking in the concrete surface. The Contractor is required to have suitable water fogging equipment at the bridge site. The purpose of fogging is to lower the temperature and raise the relative humidity in the vicinity of the work. It shall not be used to add water to the concrete other than to replace moisture lost by evaporation. An orchard type sprayer is not considered an acceptable fogging device. It shall be the responsibility of the Contractor to determine when this equipment is to be used since he will be held responsible for shrinkage cracks. A little fogging water is cheaper than patching or replacing a cracked deck.

Regardless of the weather predictions for rain, the Contractor must have available at the site sufficient coverings to protect the fresh concrete in case of an unexpected rain shower.

Before concrete becomes non-plastic, the surface of the floor shall be further finished by a burlap drag, fine bristle broom, belting, or other acceptable methods. The purpose of this procedure is to spread out any surface water that might be present and to obtain an approximately uniform texture. The burlap drag may be full width and attached to the work bridge when a transverse screed is used or may be a short width of burlap attached to the screed carriage.

Application of prewet burlap should follow closely behind the burlap drag finish. Concerns over marring the deck surface by placement of wet burlap should not outweigh the need for timely covering of the concrete for proper curing and prevention of shrinkage cracks.

The Contractor is allowed to move the screed over a previously cast deck, however the concrete deck must still be in a plastic state, or have a minimum compressive strength of 1500 psi.

As soon as practical after the required curing period, the deck surface shall be tested with the rolling straight edge for any variations in excess of the 1/8 inch in 10 feet Specification requirement. If there are any variations, the Resident Engineer shall consult with the Bridge Construction Engineer before advising the Contractor relative to areas to be corrected. The method for repair of low areas and sealing when grinding extends below the top layer of grout should be discussed with the Bridge Construction Engineer.

After all necessary corrective measures have been performed on the deck, the surface shall be grooved using a mechanical saw device. The resulting slurry must be removed from the bridge floor. If the slurry is not removed using a vacuum pickup, the Bridge Construction Engineer should be consulted as to an acceptable alternate method of removal.

420-15 CURING CONCRETE

This article covers in detail the 4 approved methods of curing concrete. The Resident Engineer should determine the method of curing before casting and see that sufficient material is at the site.

Rapid evaporation of surface moisture can and very often does cause shrinkage cracks in concrete. In most cases, the fogging equipment should be used until curing is started. The Contractor will be held responsible for all shrinkage cracks. Should cracks occur, the method of repair shall be approved by the State Construction Engineer.

Regardless of the type of curing used, the Specification requirements should be rigidly enforced. When liquid membrane curing compound is used on structures, it shall be of the wax free type and should be thoroughly mixed in the storage container just before use. Liquid membrane curing compound shall not be used where epoxy coating is required.

Attention is called to the fact that membrane curing compound shall not be used for curing bridge floors unless permitted by the State Construction Engineer and the water method of curing is required on bridge decks.

420-16 REMOVAL OF FALSEWORK AND FORMS

The rate of strength gain in concrete varies considerably depending upon the materials used in the mix and also temperature during curing. For this reason, the concrete strength in major structure units will determine when forms and falsework can be removed. Minimum strengths required shall be as shown in Table 420-1 of the Specifications. The 2400 psi requirement for walls of box culverts only applies when the top slab and walls are cast monolithically or when the wall height exceeds 10 feet. In other cases, the 12 hour requirement applies.

It is usually desirable to remove curb face forms as soon as the concrete set permits in order to work the surface with hand tools; however, in no case, should these forms be removed in less than 3 hours after the concrete is cast.

When forms are removed before the end of the required curing period, one of the curing methods required by the Specifications must be started immediately.

420-17 SURFACE FINISH

All required patching is to be performed immediately after form removal. When forms are removed before the end of the required curing period, the entire exposed concrete surface is to be kept damp until patching is completed and one of the permitted curing processes is started. Cement and sand for the patching grout must be from the same sources and in the same proportions as used in the concrete to assure even coloration of the finished surface. Curing requirements for grout patches are the same as for concrete. Improperly cured patches will shrink and crack.

420-18 EPOXY COATING

Apply epoxy coating only to the areas identified in this specification. Proper surface preparation is critical to the performance of the coating. The completed surface must be free of voids or defects. Curing compound shall not be used where epoxy coating is required.

420-19 PROTECTION OF SUBSTRUCTURE CONCRETE FROM RUST STAINS

Prior to setting unpainted structural steel, the Contractor should be encouraged to protect the substructure concrete from staining. It is easier to protect the concrete from stains than to allow the concrete to stain and attempt removal after staining occurs.

420-20 PLACING LOADS ON STRUCTURE MEMBERS

Judgment should be used before allowing the larger earthmoving equipment over box culverts. Contact the Bridge Construction Engineer if you have any doubts.

When the Contractor intends to operate or cross a bridge with heavy equipment, which is not legally allowed, on a roadway, he is required to submit his plan for approval. Examples of equipment that fall under this requirement include, but are not limited to, crawler cranes, truck cranes and concrete pumping trucks operating with outriggers down, scrapers, off-road trucks, fine grading machines and concrete paving machines. Structure Design will review the submittal for bridges being constructed under the contract. Bridge Management will review the submittal for bridges on or adjacent to the project that are open to public traffic. The Contractor's Designer of Record will review the submittal for detour bridges that have been designed by the Contractor. In no case, should heavy equipment be allowed to operate on bridges without prior approval.

During and after the placement of barrier rail, no equipment or traffic other than that necessary to place additional rail will be allowed on the deck until the rail has obtained a compressive strength of 3000 psi. Any additional rail placement operations shall be conducted so as to minimize vibrations.

TECHNICIAN'S CHECKLIST
PRE-DECK POUR

Pre - Deck Pour Checklist

Concrete

Have mix designs been submitted and approved?	
How much retarder will be used?	

TABLE 1000-2		
ELAPSED TIME FOR PLACING CONCRETE		
Air or Concrete Temperature Whichever is Higher	Maximum Elapsed Time	
	No Retarding Admixture Used	Retarding Admixture Used
90°F	30 minutes	1 hr. 15 minutes
80°F through 89°F	45 minutes	1 hr. 30 minutes
*79°F or below	60 minutes	1 hr. 45 minutes
**70°F through	60 minutes	1 hr. 45 minutes
**69°F or below	1 hr. 30 minutes	2 hr. 15 minutes
* Applicable to Class AA and A concrete.		
** Applicable to Class B concrete.		

What other admixtures will be used?	
If the air content is low air entraining agent may be added on site as long permitted by the Engineer and the specifications are followed.	

Construction Manual Section 420-4

When concrete arrives on the job with an air content below the specified level by more that the allowable tolerance, the supplier may use additional air entraining admixture if the following conditions are met:

1. The admixture is the same brand and type as originally introduced at the plant unless otherwise permitted by the Engineer.
2. **The admixture, if liquid, is measured into a bucket containing 1 gallon of water.** The admixture, if prepackaged powder, is added according to the manufacturer's recommendation.
3. The admixture, if liquid is thoroughly mixed with the water and the mixture, is then **directed to the front of the drum** with the drum momentarily stopped.
4. **The maximum allowable water-cement material ratio of the concrete is not exceeded with the addition of water and admixture solution.**
5. **The concrete is then mixed 30 revolutions at mixing speed.**
6. A record is kept by project personnel of the brand, type, and quantity of admixture and of water added is clearly noted on the sample card and batch ticket. This policy should apply only to trucks already on site and en route. However, air adjustments may be necessary on subsequent loads due to variations in raw materials at the plant.

When an air test fails and air entrainment agent is added, the mix in the pump should be wasted. When the adjusted mix exits the pump and passes they can begin discharging on the deck again.	
What quantity of mix will be ordered?	
Minimum rate must be 35 cy per hour. What is the planned rate? The maximum interval between loads can not exceed 20 minutes.	
Is fly ash required in the mix?	
How many sets of early break cylinders does the contractor want?	
How and where will concrete cylinders be protected?	
Where will the trucks wash out?	
What is the sampling frequency?	

Pumping Concrete

All grout or other materials used to lubricate the lines must be wasted off the deck.	
Where will the pump set up? Never on a deck without previous submittal and approval.	
Discuss the boom angles and how this may effect the air content.	
Can the pump reach the entire pour area?	
If not how will the other areas be poured? If the method of placement changes (such as going from a bucket to a pump) testing must be restarted. For example, if the contractor places 17 cy with a bucket and switches to a pump, he must start testing the first load coming through the pump as if it were the beginning of another pour.	
If the contractor must lay a hose out on the deck it must be supported so that it does not damage the rebar coating and prevent vibration transfer through the rebar to the fresh mix.	
Concrete delivery and pumping rate should be timed to ensure continuous operation of the pump.	
All samples for acceptance must be taken from the discharge end of the pump.	

Construction manual section 420-5

When pumping is utilized in the placement of deck concrete, the following guidelines should be observed:

1. A minimum of three Technicians should be present on a pour in which a pump is used for placement. They should be used for the following:
a. On the bridge deck to check placement, depths, finishing, straight edging, curing, etc.
b. Documentation of batch tickets, frequency of tests, and assistance of testing.
c. Testing including chase, pot, temperature, and slump as required at the pump and on the deck.
2. **On the first load, the Technician should run a chase, pot, and slump from the truck after the Contractor adjusts the water. At the pump discharge, before vibration, the Technician should run a pot and slump for correlation of losses.** Inasmuch as losses are variable, **the Technician should run additional correlation tests at cylinder time, changing spans, or if a variation in slump or excessive boom angle is noticed.**
3. To account for pump losses, concrete should be placed into the pump with a maximum slump of 4 inches and 5.5 to 7.5% air. Concrete which falls within these limits may be accepted at the truck unless the correlation indicates that the discharged concrete will be outside the 4-19 acceptable ranges. Rejection of concrete must be based from samples obtained from the pump discharge. As always, samples used for cylinders must be obtained from the pump discharge.
4. The concrete company QC person may add an air entrainment agent to the trucks only until adjustment can be made at the plant.
5. Wet epoxy coated steel is slick. **To assist the Technicians in obtaining samples, the Contractor should provide a plank walkway from the pump discharge across the mat of steel.**

If two trucks are backed up to the pump simultaneously only one truck may discharge at a time. This will allow for a constant rate of flow into the pump and will keep the mix from the trucks separated for testing purposes.	

Weather

What is the 7 day forecast?	
Is there a chance temperatures may drop below 35° F during the curing period? If so adequate insulating material must be on site.	
Regardless of the weather predictions for rain, the Contractor must have available at the site sufficient coverings to protect the fresh concrete in case of an unexpected rain shower.	
Will the air temperature be above 35° F at pour time on site in the shade?	
If insulation is necessary concrete should be batched in accordance with Article 420-7(C).	

Dry Run

Has the dry run been performed in accordance with the attached procedure?	
If so, inspect the work book to ensure the proper format has been followed.	
If not, this must be completed and approved before pouring.	
Have the location of the dry run depth checks been noted for future reference?	
Does the inspector have a device to check depth during the pour?	
If the bridge is curved has the rail been marked at increments to ensure the screed stays on the proper skew?	
If the skew is not between 75° and 105° is the screed set up on the skew?	
If there is a crown and a skew does the contractor have a skew bar kit in place?	
Does the superelevation vary making crown adjustment necessary during the pour?	
If so, has the rail been marked at the proper increments for this gradual adjustment?	
Is the screed finishing in the proper direction?	
Are the drums turning in the proper direction?	
Does the contractor have materials available for an emergency header?	
Are construction joints keyed appropriately?	
Have tattletales been provided to check deflection?	
Does the contractor have 2 workbridges on site?	
Will the curing material (burlap) be wet prior to placement?	

Placement

Is there a specific pour sequence indicated on the plans? This sequence must not vary without the permission of the Engineer.	
Has the interior of the forms been cleaned from all debris, especially in the corners?	
Concrete may not be dropped more than 3' above the beams or forms.	
If concrete is placed against previously poured mix or on concrete girders or panels the existing mix must be wet for 2 hours before the pour.	
How many people will the contractor have for the pour?	
How many people will the contractor have for curing and covering?	
Does the screed have a vibrator?	
Footprints must be vibrated out. Vibrator operators should walk backwards to avoid walking in vibrated mix.	
Concrete should be loaded on the same skew as the bridge at all times.	
Just before placing concrete the forms beams and rebar should be wet.	
Does the contractor have 2 vibrators, generators, and misting devices?	
Concrete must be placed in lifts no deeper than 12" in diaphrams.	
Do not load the deck an excessive distance beyond the screed. Doing so will make it more difficult to place the proper amount of concrete, and mix that is walked in must be revibrated.	
A minimum of 15 depth checks should be made by the inspector.	
Will the contractor have a 10' straightedge available? The deck should be straightedged at the frequency recommended in Article 420-14(B) of the spec book.	
Areas under the barrier wall should not be finished smooth, but be left in a rough condition.	
The purpose of fogging is to lower the temperature and raise the relative humidity in the vicinity of the work. It shall not be used to add water to the concrete other than to replace moisture lost by evaporation.	

Crossing

The screed may be moved across a previously cast deck 1) **before** the concrete in the entire pour has yet to achieve initial set 2) **or after** the concrete has achieved at least 1500 psi as evidenced by non-destructive testing.	

Curing	
Membrane curing compound is not allowed unless approved as a temporary measure by the Engineer. If curing compound is allowed it must be removed after the curing period.	
What approved curing media will be used?	
Curing media must be wet prior to placement on the mix.	
Curing media must be applied prior to initial set.	
Concrete must be cured for 7 days.	
Article 420-7 Protect all concrete by means of heated enclosures or by insulation whenever any of the following conditions occur: (a) The concrete is placed when the air temperature, measured at the location of the concreting operation in the shade away from artificial heat, is below 35 F. (b) The air temperature, measured at the location of the freshly placed concrete in the shade away from artificial heat, is below 35 F and the concrete has not yet attained an age of 72 hours or an age of 48 hours when using high-early strength portland cement concrete. If the mix contains fly ash or ground granulated blast furnace slag, protect the concrete for 7 days.	
Concrete should be removed from the substructure and beams immediately after the pour is completed.	

Safety	
Do all trucks have operating backup alarms?	
Will flagmen be necessary for trucks entering the road?	
Review required personal protective equipment.	
Will lighting be needed?	
Where should vehicles be parked?	

Dry Run Procedure for Transverse Screeds

1. Screed Rails can be set initially by measuring up a constant distance from the overhang form or the top of the side form, but this is only preliminary. Final adjustments must be made prior to the dry run.

2. Before beginning the carriage rail should be straightened. At all four corners of the screed the distance from the screed rail up to the carriage rail should be the same. If the bridge is in a crown section, crown can be adjusted into the truss at this point. For more detailed discussion of screed setup see Chapter 4 of the Structures II (CON 815) Manual. Place a 4' level under the front of the finish rollers, snug against the rollers. Measure from the carriage rail to the top of the level. If the screed is set correctly the measurement should be the same at all four corners of the rollers. If this measurement is not the same at all four corners the finish rollers must be adjusted on the carriage until the measurements match. This measurement will be referred to as the constant (C). (see figure)

3. Begin on one of the exterior girders. At each 10th point (or 20th or 30th point on longer spans) measure up from the top of the girder to the carriage. The carriage should be located as close to the exterior girder line you chose as possible and still allow for easy measurement. This measurement will be referred to as the shot (S).

4. Subtract the buildup (B) and the constant (C) from the shot (S) and you will be left with the deck thickness (D).

$$S-C-B=D$$

Where: S= Shot from carriage rail to top of girder
C= Constant from Carriage rail to bottom of finish rollers
B= Calculated buildup
D= Deck thickness

The deck thickness tolerance for this procedure is +/- 1/16th inch. If you do not achieve this tolerance you will not be able to verify deck thickness at the interior girders.

5. If the deck thickness, D, is greater than the plan thickness, the screed rail should be lowered until the plan thickness is achieved. Conversely, if the deck thickness, D, is less than the plan thickness, the screed rail should be raised until the plan thickness is achieved. The screed rail is adjusted by turning the nuts located between the top of the side form and the screed rail saddle.

6. Steps 3-5 should be repeated for each tenth point on the exterior girders before checking the interior girders. Any errors found on the interior girders at that point should be minor variations due to incorrect pan elevations or the arithmetic difference in the plan dead load deflection of the particular interior girder and that of the exterior girder.

7. Verify the plan deck thickness from the deck pans to the finish roller and the plan cover over the top mat of rebar. The tolerance for deck thickness and rebar cover should be +/- 1/8th inch. The thickness and cover should be checked at least every other 10th point (or 20th or 30th point) at the center of the concrete deck panel or SIP form.

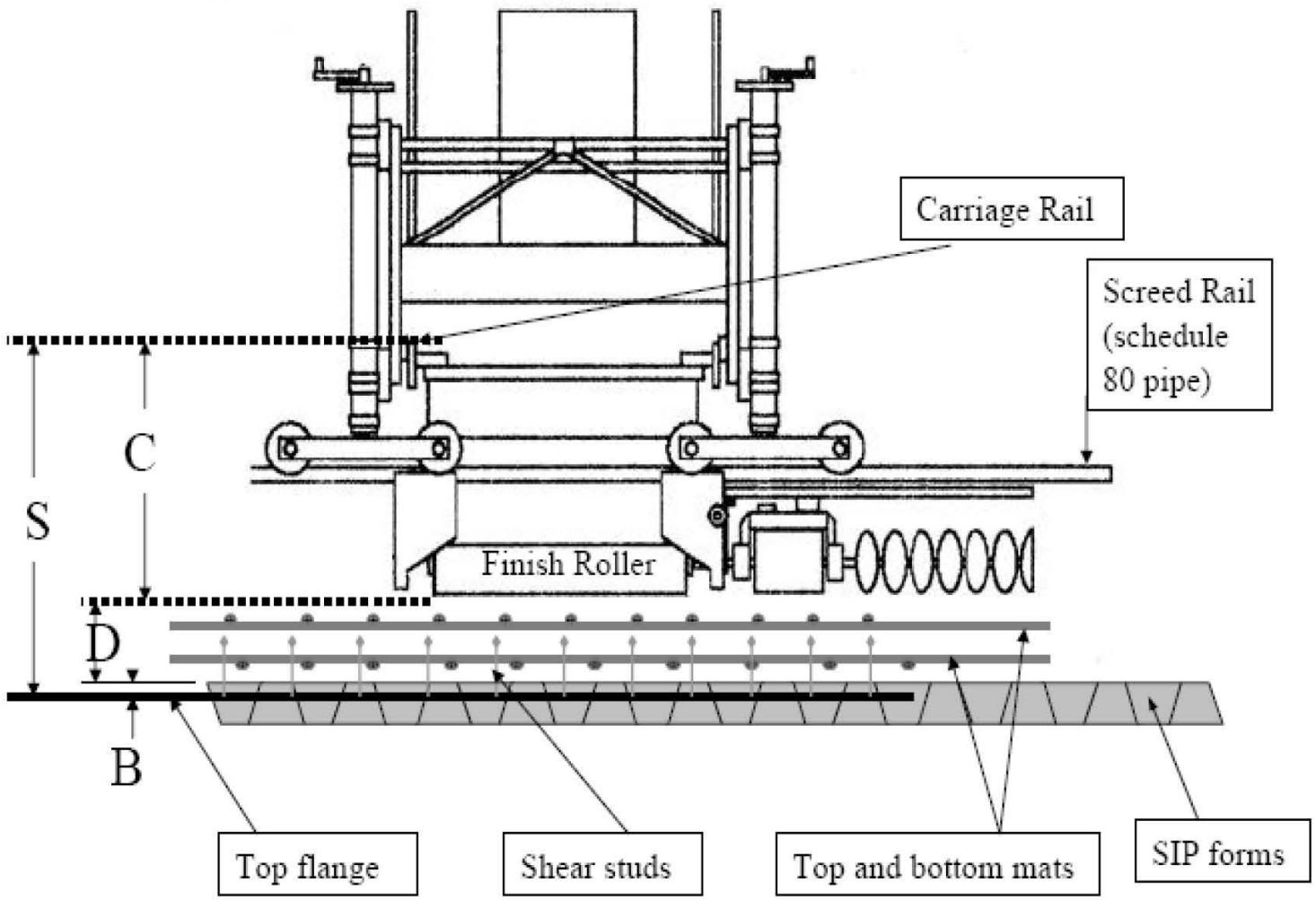
Carriage Rail
Screed Rail (schedule 80 pipe)
C
S
D
B
Finish Roller
Top flange
Shear studs
Top and bottom mats
SIP forms

Latex Modified Concrete
Prepour Checklist

Discussed √

Repair of Bridge Decks & Approaches

☐ Does the Contractor have the required equipment meeting the requirements of the Special Provisions?

☐
- Saws, Power Operated Scarifying Equipment, Sandblasters, Power Driven Hand Tools
  - Pneumatic Hammers must weigh a nominal 35 lb or less
  - Pneumatic Hammer Chisel-type bits must not exceed the diameter of the shaft

☐ Have the locations of the various surface preperations been identified? ☐ Was "Chain Drag" used? ☐

☐
- Class I Surface Preperation
  - Scarify & Remove the entire concrete Surface to a depth of 1/2"
  - If reinforcing steel is located within 1/2", use another method

☐
- Class II Surface Preperation (Partial Depth)
  - Chip all loose, unsound deck concrete to an average depth of 1/2 the deck thickness
  - No less than 3/4" below the top mat of steel
  - Clean, repair, or replace rusted or loose reinforcing steel, and clean thoroughly
  - Refill with AA concrete (Section 420 of specs), and provide raked finish
  - Refilling of Class II repair with Latex Modified Concrete is allowed if:
    - Reinforcing steel cover is 1.5" or less
    - The area being repaired is less than 1 yd^2
    - The Engineer directs the fill

☐
- Class III Surface Preperation (Full Depth)
  - Same procedures as Class II except full depth
  - Must submit for approval detailed plans for Class III Surface Preperation.
    - Submittal Reviewed?

☐
- Crack Repair
  - Remove all concrete within 2" each side of crack by chipping to a minimum depth of 3/4"
  - If reinforcing steel exposed, chip to a minimum of 3/4" below top mat of steel
  - Repair in accordance with methods of Class II repair

☐
- General
  - Clean all reinforcing steel by sandblasting
  - Remove bars that have lost 25% of original section and weld new, same-size bars
  - Maintain 1.5" cover of Class AA concrete over reinforcing steel
  - Provide 90 degree corners and vertical sides

Materials/Testing

☐ Requirements of Article 1000-8 shall be adhered to.

☐ Have admixtures been sampled?

- Test admixture samples to verify compliance with the specification requirements before use.
- Allow 7 days for sampling & testing after delivery to the project.
- For latex emulsion that has been in storage, use a transfer pump and lines to recirculate before using.

☐ Has the latex modified concrete mix design been submitted and approved?

☐ Have mixers been calibrated?

- Prior to placing latex modified concrete, perform calibration and yield tests under the Engineer's supervision.
  - Copies of these written instructions are available from M&T
- Recalibrate the mixer after any major maintenance on the mixer, if material source changes, or as directed.
- It is not uncommon to experience high air content in LMC. Air content testing should be done during calibration of the mixers in order to address any problems with high air before the production of the overlay starts.

☐ Perform the following tests on **EVERY** truck during pour:

- Slump (Inches)	3 - 6	* Measure slump 4 to 5 minutes after discharge from mixer.
- Air Content (%)	3.5 - 6.5	
- Temperature (F)	45 - 85	
- Compressive Strength (PSI)	3000	
- Yield Test	----	* 1st Load and every 3rd Load

☐ How many sets of early breaks does the Contractor want?

Concrete Placement

Have the screed rails been set in position to ensure finishing the new surface to the required profile?	
Has all equipment for deck preperation, mixing, placing, finishing and curing LMC been approved?	
Has a dry run been performed?	

- Provide a minimum overlay thickness of 1.25" and a final surface that is approximately 3/4 inch higer than original
- Prior to placing the overlay, attach a 1.25" filler block to bottom of screed and pass it over the area to be repaired to check the thickness. Remove all concrete that the block does not clear.

- If there is a crown and a skew does the contractor have a skew bar kit in place?	
- Does the superelevation vary making crown adjustment necessary during the pour?	
- If so, has the rail been marked at the proper increments for this gradual adjustment?	
- Is the screed finishing in the proper direction?	
- Are the drums turning in the proper direction?	
- Does the contractor have materials available for an emergency header?	
- Does the contractor have 2 workbridges on site?	

Has the proper surface preperation been performed?	

- Completely clean all surfaces within 48 hours prior to placing overlay.
- Thoroughly soak the clean surface for at least 2 hours immediately prior to placing latex modified concrete.
- After soaking, cover with a layer of white opaque polyethylene film at least 4 mils thick.
- Remove standing water immediately prior to placing latex modified concrete

Placing and Finishing

- Install bulkhead of easily compressible material at expansion joints to required grade and profile
- Do not treat screed rails with parting compound to facilitate their removal
- Separate screed rails and/or construction dams from newly placed material by passing a pointing trowel along face.
- When brushing the latex cement mixture onto the wetted, prepared surface, ensure that all vertical and horizontal surfaces are thoroughly and evenly coated. Coarse aggregate shall be broomed off and removed.
- Do not let the brushed material dry before being covered with latex overlay. If drying occurs, brush additional latex.
- Do not allow more than 15' of exposed latex concrete behind the screed. Cover with single layer of wet burlap
- In the event of a delay of 10 minutes or more, temporarily cover all exposed latex concrete with wet burlap & white opaque polyethelyne
- Burlap must be saturated prior to beginning pour. Drain excess water from burlap before placement
- Within 1 hour of covering with wet burlap, place 4 mil white opaque polyethelyne.
  - Cure for 48 hours
  - Remove covers and air cure for additional 96 hours
- As soon as practicle, test surface with rolling straightedge
- Sounding the deck with a 1/2" rod or drag chain shall also be performed at this time to check for delaminations
- Unless otherwise indicated on plans, groove bridge floor in accordance with Article 420-14(B)
- The purpose of fogging is to lower the temperature and raise the relative humidity in the vicinity of the work. It shall not be used to add water to the concrete other than to replace moisture lost by evaporation.
- Footprints must be vibrated out. Vibrator operators should walk backwards to avoid walking in vibrated mix.

Does the contractor have 2 vibrators, generators, and misting devices?	
Will the contractor have a 10' straightedge available?	

The deck should be straightedged at the frequency recommended in Article 420-14(B) of the spec book?

How many people will the Contractor have at the pour?	
How many people will the Contractor have dedicated to curing and covering?	
Where are locations of Construction Joints?	

- Construction joints other than those shown on the plans are not permitted without the approval of the Engineer.

☐

Limitations of Operations	
- The mixer trucks are not allowed on the bridge deck unless otherwise approved	Has approval been granted?
- No traffic is permitted on the finished latex modified concrete surface until fully cured and full strength is reached	

Weather Limitations

- Do not place latex modified concrete if any of the following occur:
  - The temperature of the concrete surface on which the overlay is to be placed is below 40 degrees or above 85 degrees. Measure the temperature under the insulation against the surface.
  - The ambient air temperature is below 45 degrees or above 85 degrees, or if the wind velocity is in excess of 10 mph.
  - The temperature of the latex modified concrete is below 45 degrees or above 85 degrees
  - The National Weather Service predicts the air temperature at the site to be below 35 degrees during the next 72 hours. If the predicted temperature is above 35 but below 50, then use insulation to protect the latex modified concrete for at least 48 hours.
  - When using insulation during the wet curing period, do not remove insulation until the ambient air temperature is at least 40 degrees & rising. Insulation shall meet the requirements of Subarticle 429-9C and, if required, shall be placed on the LMC as soon as initial set permits.
  - Stop placing latex during periods of precipitation. Keep protective coverings at the worksite.

Safety

☐ Do all trucks have operating backup alarms?

☐ Will flagmen be necessary for trucks entering the road?

☐ Review required personal protective equipment.

☐ Will lighting be needed?

☐ Where should vehicles be parked?

Schedule

☐ Deck Preperation Dates:

☐ Calibration Testing Dates:

☐ Pour Dates:

SECTION 422
BRIDGE APPROACH SLABS

422-1 DESCRIPTION

This section of the Standard Specifications governs construction of bridge approach slabs for new bridges and construction of approach slabs added to existing bridges.

Typically, bridges located on NHS routes and / or carrying a design ADT greater than 5000 VPD will have a 25 foot approach slab. All other bridges will have a 15 foot approach slab.

For flexible approach pavements (asphalt), the ends of the approach slab will follow the skew of the bridge. For rigid approach pavements (concrete pavement), the approach slab will be squared up to match the roadway, with a maximum length of 50 feet, depending on the bridge width and skew.

To allow for embankment settlement, waiting periods are noted on the plans for the construction of the end bent cap. Once this time frame is achieved, the reinforced bridge approach fill can be constructed after the end bent cap is completed.

Construct the approach slabs after construction of the bridge deck is complete and before constructing concrete barrier rails and sidewalks.

422-3 CONSTRUCTION METHODS

Bridge approach slabs are usually constructed by use of side forms and a longitudinal screed. 25’ approach slabs shall be finished and cured in the same method as the bridge deck. A vibrating screed or metal straightedge is allowable for 15' approach slabs or if the approach slab is to be overlaid with asphalt, provided acceptable results are attained.

Temporary drainage and compaction of the subbase and base material to the required density is very important to assure there is no future settlement of the slab. Backfilling along the sides of approach slabs must be performed as soon as practical to prevent erosion under the slab. Construction of temporary drainage is shown on the plans and is included in the bridge approach slab pay item.

Construction elevations for approach slabs are furnished along with those for the bridge. The Technician should assure himself the slabs are constructed to the elevations furnished to provide good rideability in the transition from roadway to bridge. After form grades are set with an Engineer’s level, a string line should be used as an **independent** check on the grades. Adjustments to the proposed grades are normally required to provide an acceptable transition.

If the bridge deck is to be mechanically grooved, the approach slab is also grooved unless otherwise noted in the plans. Grooving is usually not required for cored slab bridges or when approach slabs are added to existing bridges. In these cases, a broomed finish will be required.

422-4 MEASUREMENT AND PAYMENT

It should be noted that the lump sum bid price is full compensation for all work associated with the slab construction except for grooving and reinforced approach fills. The grooving will be paid for under the item “Grooving Bridge Decks” and reinforced approach fills will be paid under the item of "Reinforced Approach Fills, Sta___.

SECTION 425
FABRICATING AND PLACING REINFORCEMENT

425-1 DESCRIPTION

Reinforcing steel is placed in concrete to resist stresses due to flexure, tension, compression, and temperature changes.

ASTM specifications require bar identification marks to be rolled into the surface of one side of the bar to denote the producer's mill designation, bar size, type of steel, and minimum yield designation.

425-2 MATERIALS

Material requirements for reinforcing steel are covered in Articles 1070-2, 1070-3, 1070-4, 1070-8, 1070-9 (epoxy/plain spiral column reinforcing steel), and 1070-10 of the Standard Specifications. Certification of reinforcing steel with respect to grade and quality shall be the responsibility of the steel fabricator.

As reinforcing steel is delivered to the job site, it should be accompanied by Materials & Tests Form 913 and certified mill test reports for that shipment of reinforcing steel. After verifying the M&T 913 and certified mill test coincide with the actual shipment of steel, attach the 913 and mill test reports to a Material Received Report (MRR). The weight certified on the Form 913 is the weight that should be recorded on the MRR and entered into HICAMS. Soon after the shipment has been unloaded and properly stored, a check should be made between the reinforcing steel delivered and that shown on the bill of materials located in the plans. This check should be for number, size, length required, and bending details. Any discrepancies should be pointed out to the Contractor immediately.

Independent Assurance samples of each bar size are required for Federal Aid projects even if a Materials & Tests Form 913 is provided. Payment for these samples shall be incidental to the various items involved.

425-3 PROTECTION OF MATERIAL

Reinforcing steel shall be protected at all times from damage. Contractor must take precautions to block up all steel (minimum of 1 foot) and completely cover all epoxy coated reinforcing steel to prevent damage, reduce contamination, and protect the epoxy coating from too much UV exposure. Coated bars should be lifted using a spreader bar or at multiple pickup points to minimize sag and should never be dragged. Bare chains or cables should not be used for lifting coated bars. Bars slightly bent out of shape in handling or shipping may be straightened but bars badly bent or kinked must be rejected.

All dirt, dust, loose mill scale, loose rust, paint, oil, or other foreign materials must be removed from the reinforcing steel just prior to casting the concrete. All hardened mortar on reinforcing steel must be removed before placing the concrete around it. Any damage to epoxy coated reinforcing steel is the Contractor's responsibility and the damage must be repaired prior to casting concrete.

425-4 PLACING AND FASTENING

Reinforcing steel must be secured in the correct position before concrete casting is begun. Checks should be made during the casting operation to be assured that the reinforcing bars are not shifting. The size, spacing, and concrete cover on reinforcing steel is a design feature and positions shown in the plans are necessary to obtain the required strength of the structure. Thus, care should be taken when placing and fastening reinforcing steel and Technicians should visually inspect the placement of reinforcing steel in all members being cast to ensure the plans are being followed as closely as possible.

Reinforcing steel is only to be welded in accordance with the American Welding Society's Reinforcing Steel Welding Code AWS D1.4 and only where required in the plans or approved by the Engineer.

Epoxy coated reinforcing steel should be inspected immediately before being placed into the forms. Any coating damage should be repaired as detailed in Section 1070-8(K) with the material specified in Section 1070-8(C). Once the epoxy coated steel has been placed into the forms, concrete should be placed within 30 days to avoid having to cover the epoxy coated steel required by Article 425-3 of the Standard Specifications.

Metal bar supports shall be approved by the Materials & Tests Unit prior to their use in a structure. The Resident Engineer may require the Contractor to decrease the spacing shown on the plans to prevent sagging of the reinforcing steel. See the following sheets for details of various types of bar supports.

The Contractor should clearly understand that he is to place the reinforcing steel and allow a sufficient time thereafter to permit inspection and approval by the Resident Engineer or his Technician prior to beginning the concrete casting operation. Any concrete cast contrary to this requirement should be rejected and removed.

See the following sheets for standard reinforcing steel identification marks and details.

425-5 SPLICING

Splicing of reinforcing bars except when shown on the plans will not be permitted without written approval.

Special care shall be taken to provide the proper lap distance at each splice. Splice lengths shall be as shown on the plans.

Sheets of wire mesh shall overlap at least the dimensions of one mesh and shall be securely fastened to each other along the edges and ends.

Mechanical Butt Slices are only allowed when shown on the plans or when approved by the Engineer. Bars are spliced in accordance with the manufacturer's required accessories as approved by the Engineer.

STANDARD HOOKS

All specific sizes recommended by CRSI below meet minimum requirements of ACI 318-83

RECOMMENDED END HOOKS
All Grades

D=Finished bend diameter

Bar Size	180° HOOKS			90° HOOKS
	D	A or G	J	A or G
# 3	2¼	5	3	6
# 4	3	6	4	8
# 5	3¾	7	5	10
# 6	4½	8	6	1-0
# 7	5¼	10	7	1-2
# 8	6	11	8	1-4
# 9	9½	1-3	11¾	1-7
#10	10¾	1-5	1-1¼	1-10
#11	12	1-7	1-2¾	2-0
#14	18¼	2-3	1-9¾	2-7
#18	24	3-0	2-4½	3-5

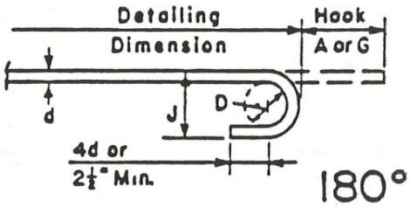

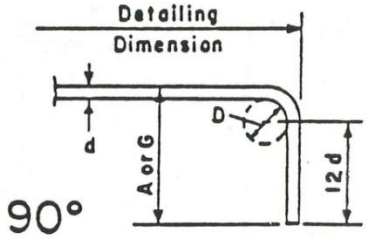

STIRRUP AND TIE HOOKS

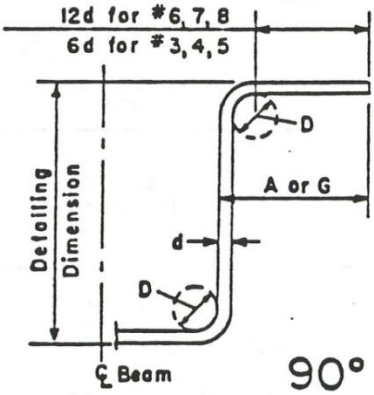

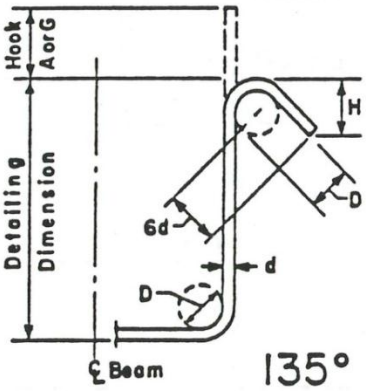

135° SEISMIC STIRRUP/TIE HOOKS

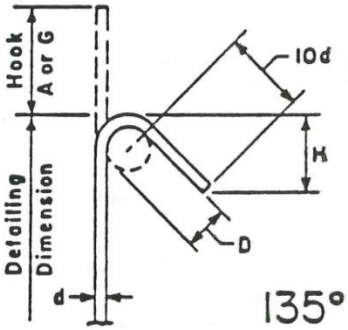

STIRRUPS
(TIES SIMILAR)

STIRRUP AND TIE HOOK DIMENSIONS
Grades 40-50-60 ksi

Bar Size	D (in.)	90° Hook	135° Hook	
		Hook A or G	Hook A or G	H Approx.
#3	1½	4	4	2½
#4	2	4½	4½	3
#5	2½	6	5½	3¾
#6	4½	1-0	7¾	4½
#7	5¼	1-2	9	5¼
#8	6	1-4	10¼	6

135° SEISMIC STIRRUP/TIE HOOK DIMENSIONS
Grades 40-50-60 ksi

Bar Size	D (in.)	135° Hook	
		Hook A or G	H Approx.
#3	1½	5	3½
#4	2	6½	4½
#5	2½	8	5½
#6	4½	10¾	6½
#7	5¼	1-0½	7¾
#8	6	1-2¼	9

NOTES:
1. 180° hook J dimension (sizes #10, #11, #14 and #18), and A or G dimension (#14 and #18) have been revised to reflect recent test research using ASTM/ACI bend test criteria as a minimum.
2. Tables for Stirrup and Tie Hook dimensions have been expanded to include sizes #6, #7, and #8 to reflect current design practices.

REINFORCING BARS

IDENTIFICATION MARKS – ASTM STANDARD BARS

The ASTM specifications for billet-steel, rail-steel, axle-steel and low-alloy steel reinforcing bars (A 615, A 616, A 617, and A 706 respectively) require identification marks to be rolled into the surface of one side of the bar to denote the producer's mill designation, bar size, type of steel and minimum yield designation. Grade 60 bars show these marks in the following order:

1st – Producing Mill (usually a letter)

2nd – Bar Size Number (#3 through #18)

3rd – Type Steel: S for Billet (A 615)

I for Rail (A 616)

I R for Rail meeting Supplementary Requirements S1 (A 616)

A for Axle (A 617)

W for Low-Alloy (A 706)

4th – Minimum Yield Designation

Minimum yield designation is used for Grade 60 and Grade 75 bars only. Grade 60 bars can either have one (1) single longitudinal line (grade line) or the number 60 (grade mark). Grade 75 bars can either have two (2) grade lines or the grade mark 75.

A grade line is smaller and between the two main ribs which are on opposite sides of all U.S. made bars. A grade line must be continued at least 5 deformation spaces. A grade mark is the 4th mark on a bar.

Grade 40 and 50 bars are required to have only the first three identification marks (no minimum yield designation).

ASTM STANDARD REINFORCING BARS

BAR SIZE	NOMINAL AREA (sq. inches)	WEIGHT (pounds per ft.)	NOMINAL DIAMETER (inches)
# 3	0.11	0.376	0.375
# 4	0.20	0.668	0.500
# 5	0.31	1.043	0.625
# 6	0.44	1.502	0.750
# 7	0.60	2.044	0.875
# 8	0.79	2.670	1.000
# 9	1.00	3.400	1.128
#10	1.27	4.303	1.270
#11	1.56	5.313	1.410
#14	2.25	7.650	1.693
#18	4.00	13.600	2.257

VARIATIONS: Bar identification marks may be oriented as illustrated or rotated 90°. Grade mark numbers may be placed within separate consecutive deformation spaces. Grade line may be placed on the side opposite the bar marks.

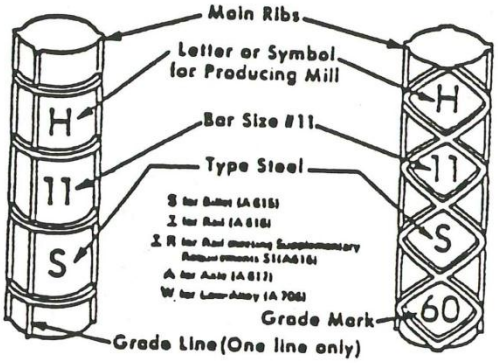

GRADE 60 AND A 706

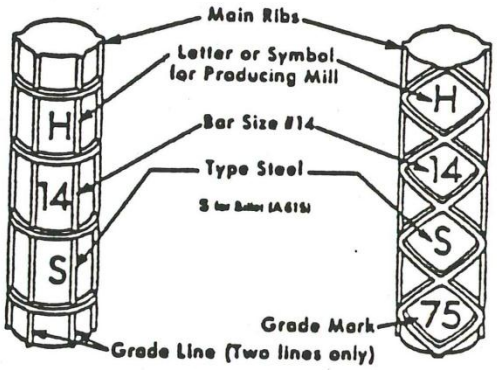

GRADE 75

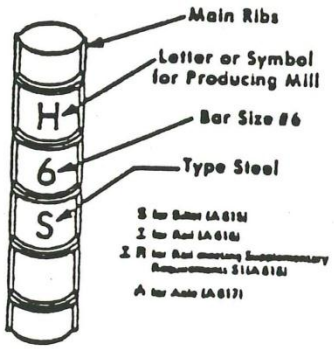

GRADE 40 AND 50

BAR IDENTIFICATION MARKS

BAR SUPPORTS

TABLE I — TYPES AND SIZES

SYMBOL	BAR SUPPORT ILLUSTRATION	BAR SUPPORT ILLUSTRATION PLASTIC CAPPED OR DIPPED	TYPE OF SUPPORT	SIZES
SB	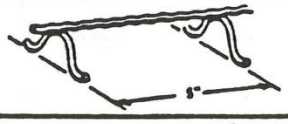	CAPPED	Slab Bolster	¾, 1, 1½, and 2 inch heights in 5 ft. and 10 ft. lengths
SBU*	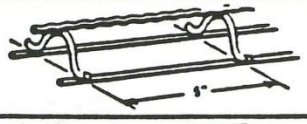		Slab Bolster Upper	Same as SB
BB	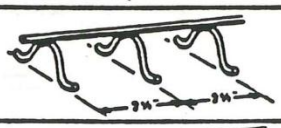	CAPPED	Beam Bolster	1, 1½, 2, over 2" to 5" heights in increments of ¼" in lengths of 5 ft.
BBU*	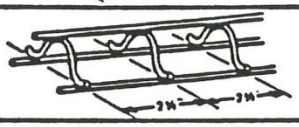		Beam Bolster Upper	Same as BB
BC		DIPPED	Individual Bar Chair	¾, 1, 1½, and 1¾" heights
JC	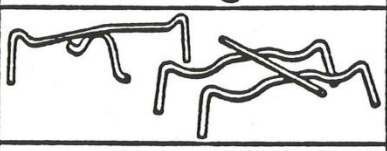	DIPPED 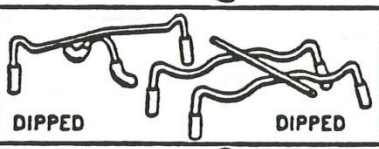 DIPPED	Joist Chair	4, 5, and 6 inch widths and ¾, 1 and 1½ inch heights
HC	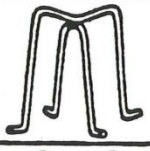	CAPPED 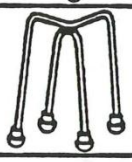	Individual High Chair	2 to 15 inch heights in increments of ¼ inch
HCM*			High Chair for Metal Deck	2 to 15 inch heights in increments of ¼ in.
CHC	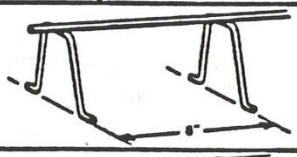	CAPPED 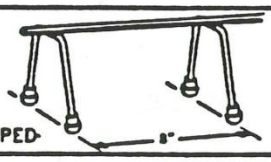	Continuous High Chair	Same as HC in 5 foot and 10 foot lengths
CHCU*	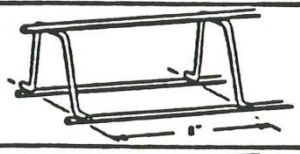		Continuous High Chair Upper	Same as CHC
CHCM*	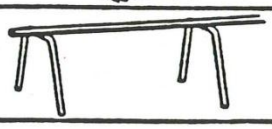		Continuous High Chair for Metal Deck	Up to 5 inch heights in increments of ¼ in.
JCU**	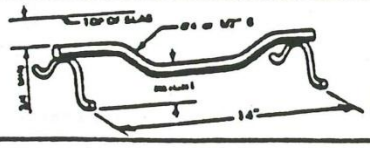	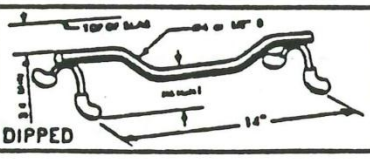 DIPPED	Joist Chair Upper	14" Span Heights −1" thru +3½" vary in ¼" increments

*Usually available in Class 3 only, except on special order.
**Usually available in Class 3 only, with upturned or end bearing legs.

TABLE II[1] — WIRE SIZES & GEOMETRY

		WIRE SIZES[2]				
		CARBON STEEL			STAINLESS STEEL	
SYMBOL	NOMINAL HEIGHT[3]	TOP	LEGS	RUNNER	LEGS	USUAL GEOMETRY
SB	All	4 ga. Corrugated	6 ga.	—	8 ga.	Legs spaced 5 in. on center. Vertical corrugations spaced 1 in. on center.[4]
SBU	All	4 ga. Corrugated	6 ga.	7 ga.	—	Same as SB
BB	Up to 1½" incl.	7 ga.	7 ga.	—	9 ga.	Legs spaced 2½ in. on center.[4]
	Over 1½" to 2" incl.	7 ga.	7 ga.	—	8 ga.	
	Over 2" to 3½" incl.	4 ga.	4 ga.	—	7 ga.	
	Over 3½"	4 ga.	4 ga.	—	—	
BBU	Up to 2" incl.	7 ga.	7 ga.	7 ga.	—	Same as BB.
	Over 2"	4 ga.	4 ga.	4 ga.	—	
BC	All	—	7 ga.	—	9 ga.	—[4]
JC	All	—	6 ga.	—	9 ga.	—[4]
HC	2" to 3½" incl.	—	4 ga.	—	7 ga.	Legs at 20 deg. or less with vertical. When height exceeds 12 in., legs are reinforced with welded crosswires or encircling wires.[5]
	Over 3½" to 5" incl.	—	4 ga.	—	—	
	Over 5" to 9" incl.	—	2 ga.	—	—	
	Over 9" to 15" incl.	—	0 ga.	—	—	
HCM	2" to 5" incl.	—	4 ga.	—	—	Same as HC. The longest leg will govern the size of wire to be used.[5]
	Over 5" to 9" incl.	—		—	—	
	Over 9" to 15" incl.	—		—	—	
CHC	2" to 3½" incl.	2 ga.	4 ga.	—	7 ga.	Legs at 20 deg. or less with vertical. All legs 8¼ in. on center maximum, with leg within 4 in. of end of chair, and spread between legs not less than 50% of nominal height.[6]
	Over 3½" to 5" incl.	2 ga.	4 ga.	—	—	
	Over 5" to 9" incl.	2 ga.	2 ga.	—	—	
	Over 9" to 15" incl.	2 ga.	0 ga.	—	—	
CHCU	2" to 5" incl.	2 ga.	4 ga.	4 ga.	—	Same as CHC.
	Over 5" to 9" incl.	2 ga.	2 ga.	4 ga.	—	
	Over 9" to 15" incl.	2 ga.	0 ga.	4 ga.	—	
CHCM	Up to 2" incl.	4 ga.	6 ga.	—	—	With 4 ga. top wire, maximum leg spacing is 5 in. on center.[6] With 2 ga. top wire, maximum spacing is 10 in. on center.[6]
	Up to 2" incl.	2 ga.	4 ga.	—	—	
	Over 2" to 5" incl.	2 ga.	4 ga.	—	—	
JCU	−1" to +3½" incl. (Measured from form to top of middle portion of saddle bar) in ¼" increments.	#4 bar or ½" ø	2 ga.	—	—	Legs spaced 14 in. on center. Maximum height of JCU at support legs shall be slab thickness minus ¾ in.

[1] Top wire on continuous supports, not otherwise designated as corrugated, may be straight or corrugated.

[2] Wire sizes are American Steel & Wire gauges.

[3] The nominal height of the bar support is taken as the distance from the bottom of the leg, sandplate or runner wire to the bottom of the reinforcement. Variations of plus or minus ⅛ in. from the stated nominal height are generally permitted.

[4] In order to provide adequate stability against overturning, the leg spread measured between points of support on the minor axis of the support is recommended to be not less than 70 percent of the nominal height.

[5] In order to provide adequate stability against overturning, the leg spread measured between points of support on the minor axis of the support is recommended to be less than 55 percent of the nominal height.

[6] In order to provide adequate stability against overturning, and to provide adequate load capacity, the leg spread measured between points of support on the minor axis of the support is recommended to not exceed the minimum and maximum percentages of the nominal height, as shown.

NOMINAL HEIGHT (INCHES)	DISTANCE BETWEEN SUPPORTS, % OF NOMINAL HEIGHT	
	MINIMUM	MAXIMUM
Under 4	70	No limit
4	70	95
6	65	90
8	60	85
10	55	80
12	50	75
Over 12	50	75

SECTION 430
ERECTING PRESTRESSED CONCRETE MEMBERS

430-1 DESCRIPTION

Prestressed concrete members used for structures may be piles, girders, cored slab units, box beams, or deck panels. Girders are used to support the bridge decks. Cored slabs and box beams are positioned side by side to form a deck with shear keys on the vertical faces that are grouted after sections are placed in final position. A bituminous wearing surface or concrete overlay is placed over the completed cored slab or box beam deck. Prestressed concrete deck panels may be used on some bridges and are a part of the total deck thickness. Design and erection requirements for the deck panels are covered in the project Special Provisions.

430-2 MATERIALS

Prestressed concrete members are inspected at the casting plant and a Materials & Tests Unit's "Approved" stamp should be on each member when it is delivered to the job site. If there is no "Approved" stamp on the member, the State Materials Engineer is to be notified and the member is not to be incorporated into the work until it has been inspected and approved by Materials & Tests personnel.

430-3 HANDLING AND STORAGE

Members damaged while being handled or transported shall be rejected unless they can be repaired to the satisfaction of the Bridge Construction Engineer. Members are to be handled at the pick-up points shown on the plans unless other methods have been approved in writing. Any cracks or other damage should be called to the attention of the Bridge Construction Engineer. See Article 108-15 for alignment and dimensional tolerances for prestressed units. Materials and Tests personnel typically identify members that exceed the allowable tolerances at the casting plant. However, there are instances that problems are discovered after shipment that result in placement issues. Members exceeding allowable tolerances should not be rejected until specifics are discussed with the Bridge Construction Engineer.

430-5 BEARINGS AND ANCHORAGES

Steel sole plates shall be set in exact position and full and even bearing will be required on the bearing pad. Prior to setting the prestressed member, grind the galvanized surface of the portion of the embedded plate and sole plate that requires welding. Welding of the sole plate to the embedded plate should be preformed as soon as possible along with painting of the welds. Technicians should utilize temperature indicating wax pens to ensure the temperature during welding of the sole plate does not exceed 300˚ F. Exceeding this temperature during the welding operation could damage the elastomeric bearing pad. In addition, Technicians should verify that the welds and painting of the welds are satisfactory on the interior bents while the Contractor still has easy access to the bent caps.

430-6 ERECTION AND INSTALLATION

Members shall be erected using only the pick-up points designated on the plans or other methods that have been approved in writing.

As soon as prestressed girders are set in position, levels should be run to determine elevations along the tops of girders. Elevations should be recorded in the Structure Work Book and used in determining the position of the slab form with respect to the top of girder. "Buildups" will need to be determined before the placement of the stay-in-place forms can be installed. (Refer to the Engineering Control Section of the Construction Manual for further details and procedures for computing buildups.) In some cases buildups can result in a negative value and; if such is the case, the top of girder will project into the floor slab. If this occurs, the Bridge Construction Engineer should be consulted.

When precast concrete deck panels are used to form the bottom of the deck slab, check for adequate cover over the top mat of reinforcing steel. If the plan cover cannot be obtained, consult with the Bridge Construction Engineer.

When prestressed cored slabs are utilized, shear keys, dowel holes, and recesses at the ends of the transverse strands shall be filled with an approved non-metallic, non-shrink grout. The non-shrink grout shall be cured for a minimum of 3 days and until it reaches a compressive strength of 3000 psi. When filling the shear keys, the Technician should visually check under the cored slabs to ensure the grout does not leak between the slabs. If grout leakage occurs, the material should be removed immediately due to the difficulty removing when set has occurred. Prior to placing loads that exceed the legal limit on the tensioned and cured cored slab spans, the Contractor shall submit for approval a detailed description of the equipment along with his intended protection of the cored slab units while the equipment is on the structure.

Box beams are similar to cored slab units but are deeper in section; therefore, resulting in longer span lengths. Transverse post tensioning strands in box beams are 0.6" in diameter and must be tensioned to a higher tension than cored slabs (see plans for requirements). During tensioning of the strands, a symmetric tension force between each pair of strands must be maintained. As with cored slabs, any load exceeding legal limits that is placed on the box beam must be approved by the Engineer.

430-7 PAINTING

All non-galvanized steel surfaces such as tie rod ends, field welds, and galvanized surfaces damaged by field welding or otherwise shall be cleaned and painted with two coats of an approved organic zinc rich repair paint meeting the requirements of Article 1080-9 of the Specifications. This paint shall be applied only by brush to ensure a minimum dry thickness coat of paint of 1.5 mils.

440-2 MATERIALS

All steel materials shall meet the requirements of Section 1072 of the Specifications.

Structural steel is tested and inspected at the fabrication plants. Steel members not having an approved stamp are not to be incorporated into the work until they have been inspected and approved by a representative of the Materials & Tests Unit.

The Bridge Technician should inspect all steel when it is received and after erection to see that there has been no damage in shipping or handling. Any damage or fabrication errors should be reported to the Bridge Construction Engineer immediately so that arrangements can be made for proper corrections. The Bridge Construction Engineer will make the decision as to the need for a Materials & Tests inspection during corrective operations.

DRAWINGS

In order to expedite handling, the Contractor may send shop drawings directly to the State Bridge Design Engineer with a copy of the transmittal letter to the Resident Engineer and State Construction Engineer. The Contractor may permit the fabricator to send shop drawings directly to the State Bridge Design Engineer with copies of the transmittal letter to the Resident Engineer and to the Contractor. In cases involving a Subcontractor, the Resident Engineer, Prime Contractor, and the Subcontractor should all be informed. This procedure should be adhered to on each successive submittal of drawings.

Drawings will be reviewed by the Structure Design Unit and when found satisfactory will be accepted and/or distributed. The Resident Engineer will receive 2 sets of prints. One set is to be retained in the Resident Engineer's office and one set is to be issued to the Technician for use in the field. Copies of the transmittal letter will be sent to the Division Engineer, Prime Contractor, Subcontractor, State Materials Engineer (with 2 sets of accepted drawings be forwarded to the appropriate Shop Technician), Testing Company on out-of-State work, State Construction Engineer, Bridge Construction Engineer, and the fabricator. When drawings are submitted for acceptance, the fabricator will receive one set of prints. Accepted sets will be either stamped “Accepted” or “Accepted as Noted” on each sheet or on the top sheet with a perforation pattern through the entire set.

Usually there will be one or more intermediate steps between first submittal and distribution of drawings. If deficiencies are found, they will be marked and returned to the fabricator for review and appropriate action. Copies of this transmittal letter will be sent to the Division Engineer, Resident Engineer, State Materials Engineer, State Construction Engineer, and the Contractor(s). When necessary changes are made, the fabricator will resubmit his drawings for a second review. Acceptance and/or distribution usually follows this step.

On bridges carrying railroad traffic, drawings will be forwarded by the Structure Design Unit to the railroad or railroad's consultant for review and/or approval. Copies of this correspondence will be sent to the Division Engineer, Resident Engineer, State Construction Engineer, Contractor(s), fabricator, railroad and/or railroad's consultant. The railroad will return drawings to the State Bridge Design Engineer for distribution.

Acceptance of shop drawings does not relieve the Contractor of his responsibility for the correctness of his drawings including, fit of shop and field connections. The Contractor must

submit for acceptance any proposed changes in the shop drawings after initial acceptance and/or distribution.

440-3 HANDLING AND STORING MATERIAL

Handling, transporting, and storing of structural steel shall be such that the material will be kept clean and free from injury. Blocking above the ground will be required during storage. When lifting structural steel members, ensure requirements detailed in Article 1072-11 are met.

440-4 BEARINGS AND ANCHORAGES

Bearing plates shall be set in exact position required on the plans and full and even bearing will be required between all of the elements making up the bearing assembly. Depending on the span length and bearing type, the plans may contain a chart with different settings based on the temperature. In most cases, sole plates are to be field welded to allow for adjustment after the beams are erected.

When using elastomeric bearing pads and for spans lengths greater than 120 feet, grout pots will be required and the plans will contain the below note:

"The Contractor's attention is called to the following procedures to accommodate girder translation and end rotation:

1. *Once the deck has cured, the girders shall be jacked and the anchor bolts, sole plate, and elastomeric bearing slots shall be centered as nearly as practical about the bearing stiffner. This operation shall be performed at approximately 60 °F.*
2. *After centering the slots and anchor bolts, the sole plates shall be field welded to the girder flanges and the anchor bolts grouted.*

The Contractor may propose alternate methods, provided details are submitted to the Engineer for review and approval."

Questions concerning this requirement or alternate methods submitted by the Contractor should be directed to the Bridge Construction Engineer.

440-5 STRAIGHTENING BENT MATERIAL

Sometimes steel members are bent during transporting and handling. When this occurs, the Bridge Construction Engineer should be notified. Depending on the degree of the problem, the Bridge Construction Engineer may involve the Structure Design Unit and Materials and Tests Unit in the investigation and will determine the need for field corrections or refabrication.

Procedures for field corrections must be submitted and approved prior to performing the work and all corrections to structural steel will be inspected by the Materials & Tests Unit.

440-6 FIELD ERECTION

The plans, all notes, and the Special Provisions must be studied carefully before each structure is started to be sure that the structural steel is erected properly.

Steel surfaces to be in permanent contact shall be adequately cleaned before the members are assembled.

Before placing permanent fasteners, one half of the holes in a connection or splice shall be filled with a combination of erection bolts and erection pins. For continuous units, all beam and

girder splices shall be pinned and bolted and adjusted to correct elevation before permanent fastening begins. After the permanent fasteners are brought up tight and prior to full tensioning, the camber in each girder should be checked for conformity with the plans. Subarticle 1072-12 of the Specifications indicates allowable deviation of field measured camber from specified camber. If the actual deviation exceeds the allowable, the Bridge Construction Engineer shall be notified and he will determine need for correction.

440-7 FIELD WELDING

Unauthorized field welding on structural steel may significantly weaken the structure. Field welding not shown on the plans will not be permitted without consultation with the Bridge Construction Engineer.

Falsework plans for concrete decks sometimes show tie rods field welded to top flanges of beams and girders. When continuous units are involved, field welding to the top flanges will not be permitted in the tension areas. These areas will be shown on the approved falsework plans. Any welding on a structure requires a certified welder.

Each welder or welding operator shall be prequalified in accordance with Article 1072-20 of the Specifications. Welders are subject to satisfactory field performance as determined by the Resident Engineer.

The Technician shall carefully examine the qualifications for each welder, check for approved welding electrodes, and restrict his welding to the positions and grades of steel for which he has been qualified.

An approved list of welders and welding electrodes can be obtained by the Resident Engineer from the Materials and Tests Unit's web page or in HICAMS. In addition to the approved list of welders, all new and recertifications of welders will be through the NCDOT Field Welder Certification Program which is administered by the Materials and Tests Unit and is outlined below:

NCDOT FIELD WELDER CERTIFICATION PROGRAM

- M&T to test all welders. This may be done at one of the M&T offices, project site, or Contractors facility (in State only).
- M&T to provide a welding machine, test plates, and all tools needed to take test. Welder may also use his own machine.
- M&T to test welded plates. If weld meets requirements, a picture ID certification card and a printed certificate will be given to the Welder.
- The picture ID of welder will be required at field site in lieu of social security number.
- Certification good for NC DOT's projects only. It will not include any references to AWS, ASME, or other welding codes.
- M&T may accept other DOT's certification program pending review. Currently, Georgia & West Virginia have been accepted.
- Test to be given for 3 different classifications of welders.
  1. <u>SIP Welder</u> - Fillet weld test on (2F position). Must stop and start near middle of weld. Will qualify welders for metal stay-in-place forms only.
  2. <u>Bridge Welder</u> - Fillet weld (3F position) and groove weld (3G and 4G positions) test. Will qualify welders for all types of bridge welding.
  3. <u>Pipe Welder</u> - 6G position for groove weld test on 6-inch schedule 80 pipe. Required for welding pipe under 24 inches in diameter.

Pipe Welder automatically qualifies as a Bridge Welder and SIP Welder. Bridge Welder automatically qualifies as a SIP Welder. If only certified as SIP Welder, then can not perform as a Bridge Welder or Pipe Welder.

- Fees vary, depending upon test taken, i.e., SIP, Bridge, or Pipe Welder.
- Certification will be valid for 5 years unless there are questions about welder's ability; then a retest may be required.
- Implementation - After July 1, 2006 all new welders must be certified under the new program.
  - Welders certified under the current program will be accepted through the expiration date listed in HICAMS or M&T web page.

All field welding should be inspected thoroughly by the Resident Engineer or Technician for proper weld size and quality. Slag should be removed immediately after a welded connection is completed. A weld cannot be inspected until after the slag has been removed. If technical assistance in welding or welding inspection is needed, the Resident Engineer may contact the Structural Members Engineer at the Materials & Tests Unit. If there is any doubt concerning the adequacy of the field welding, the Resident Engineer should notify the Bridge Construction Engineer in order that the field welding can be further inspected.

Each Resident Engineer should have a set of welding gauges. They may be obtained through the Materials & Tests Unit and are very simple to use in checking sizes of field welds. Checks should be made to assure that welds are of the sizes indicated on the plans.

See the following standard welding symbols and typical types of field welds:

WELDED JOINTS – STANDARD SYMBOLS

WELDED JOINTS
Standard symbols

BASIC WELD SYMBOLS

BACK	FILLET	PLUG OR SLOT	GROOVE OR BUTT						
			SQUARE	V	BEVEL	U	J	FLARE V	FLARE BEVEL

SUPPLEMENTARY WELD SYMBOLS

BACKING	SPACER	WELD ALL AROUND	FIELD WELD	CONTOUR		For other basic and supplementary weld symbols, see AWS A2.4-79
				FLUSH	CONVEX	
M	M					

STANDARD LOCATION OF ELEMENTS OF A WELDING SYMBOL

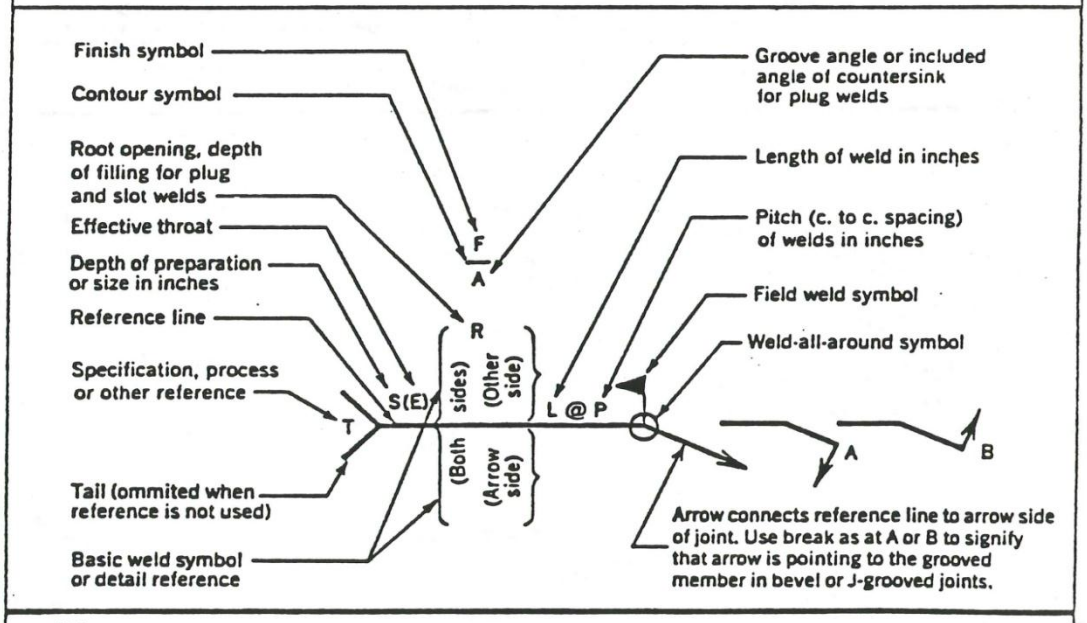

Note:

Size, weld symbol, length of weld and spacing must read in that order from left to right along the reference line. Neither orientation of reference line nor location of the arrow alter this rule.

The perpendicular leg of ◺, V, Y, V weld symbols must be at left.

Arrow and Other Side welds are of the same size unless otherwise shown. Dimensions of fillet welds must be shown on both the Arrow Side and the Other Side Symbol.

The point of the field weld symbol must point toward the tail.

Symbols apply between abrupt changes in direction of welding unless governed by the "all around" symbol or otherwise dimensioned.

These symbols do not explicitly provide for the case that frequently occurs in structural work, where duplicate material (such as stiffeners) occurs on the far side of a web or gusset plate. The fabricating industry has adopted this convention: that when the billing of the detail material discloses the existence of a member on the far side as well as on the near side, the welding shown for the near side shall be duplicated on the far side.

IDENTIFICATION OF ARROW SIDE ANDO THER SIDE OF JOINT

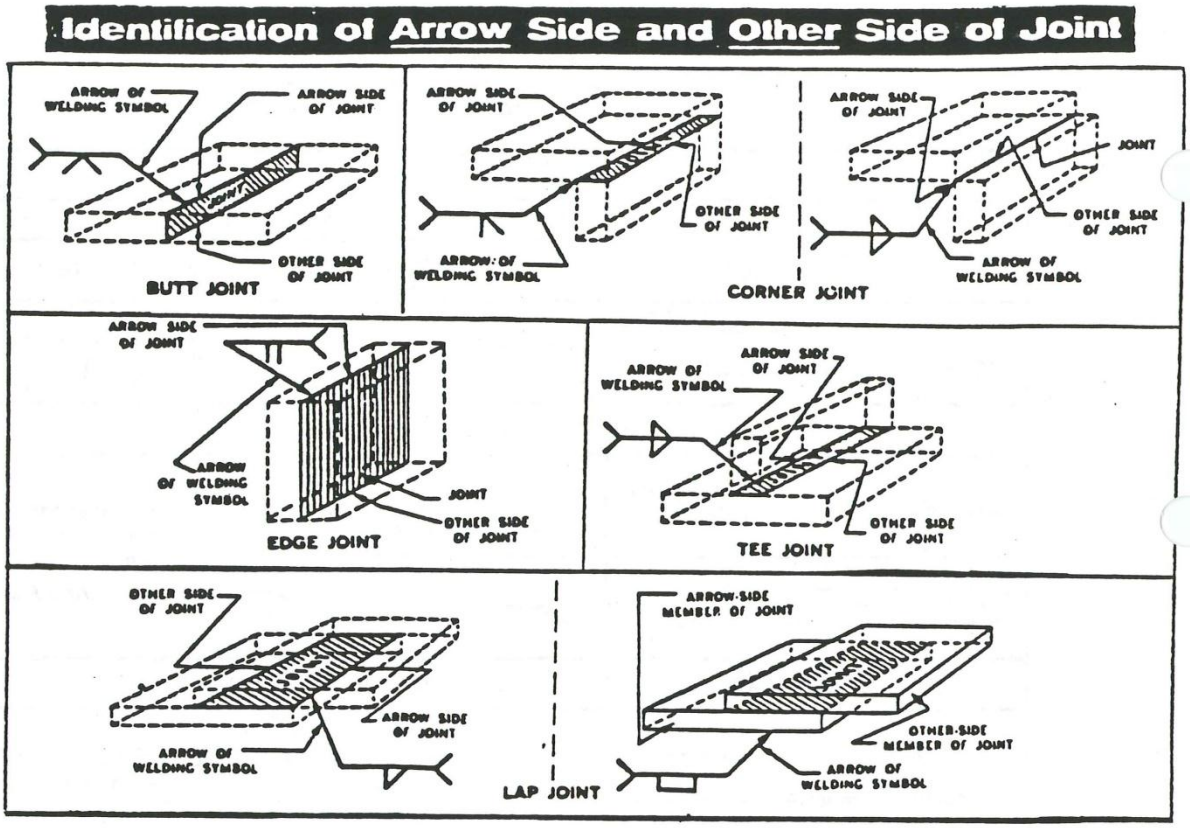

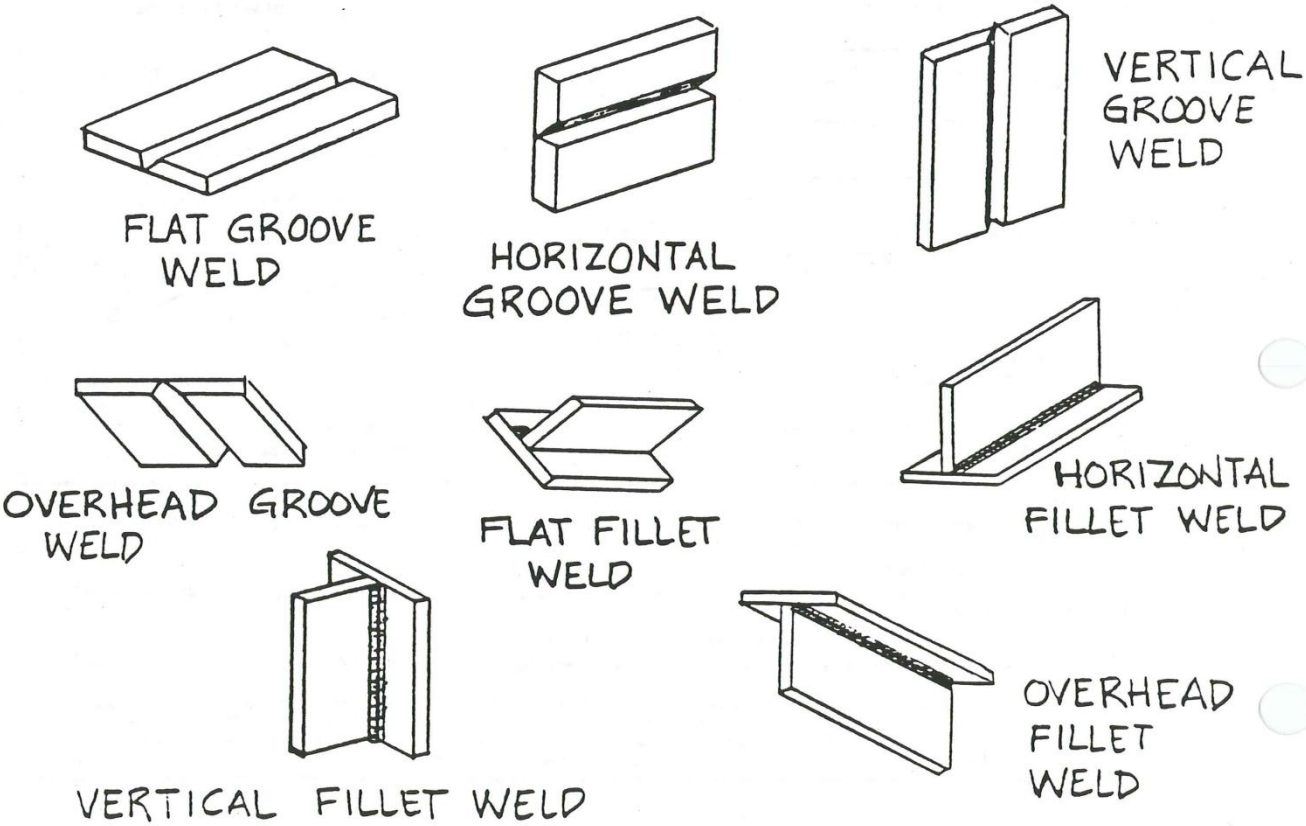

440-8 CONNECTIONS USING HIGH STRENGTH BOLTS

Generally, bolted connections on structures are designed as friction connections. In order for this type of connection to function properly, the bolts must be sufficiently tensioned to prevent slippage between any of the members in the connection. Specified bolt tension is essential. Proper cleaning of contact surfaces is of equal importance. Contact surfaces including those under bolt heads, nuts or washers, shall be free of paint except primer if required in the Special Provisions or plans and shall also be free of scale, dirt, burrs, oil, lacquer, loose rust, rust inhibitor, or other material.

If misfits, warps, or buckles prevent close contact of the connected members, bolting should be stopped immediately and this condition called to the attention of the Bridge Construction Engineer.

High strength bolts, nuts, and washers fall into three categories: (1) plain without corrosion resistance, (2) plain with corrosion resistance, and (3) galvanized. The type required will be specified on the plans or in the contract Special Provisions. Approved load indicating bolts may also be allowed. If the Contractor proposes to use load indicating bolts, manufacturer's literature for the bolting system must be submitted to the State Bridge Design Engineer for review and approval. This approval will be subject to satisfactory field performance.

Generally, galvanized fasteners are required in diaphragm connections where shop application of finish paint is specified for structural steel. With this paint system, fasteners for beam or girder field splices are plain without corrosion resistance. Plain fasteners without corrosion resistance are used with other paint systems. Plain fasteners with corrosion resistance are required where the structural steel is to remain unpainted.

In most cases, high strength bolts, nuts, and washers are pretested and are delivered to the job site in containers tagged by Materials & Tests Unit. However, it is the Structure Technician's responsibility to assure the correct type fasteners are used. Article 1072-7 of the Specifications lists specific requirements for the different type fasteners and identification marking. If there is any doubt concerning bolts furnished, the Bridge Construction Engineer should be consulted.

Unless otherwise noted in the plans or project provisions, all structural steel fasteners shall be installed using Direct Tension Indicators (DTIs). Prior to beginning assembly of structural joints, the Technician should review all requirements of DTIs. The Contractor is required to provide the appropriate number of metal feeler gages for performing tests. The most critical aspect in achieving an acceptable bolted connection is the condition of all bolts, nuts, & washers. All bolts, nuts, & washers must be protected from moisture during storage so that they show no signs of rust during installation. All bolts, nuts, & washers shall have a thin coat of lubricant at the time of installation. Prior to starting the bolt installation, a tension indicating device (Skidmore-Wilhelm) shall be provided to confirm the acceptability of the DTI's. That is, that the protrusions on the DTI do not compress prior to achieving the required bolt tension. The Skidmore-Wilhelm shall be certified within 6 months prior to its use. Note that the Skidmore-Wilhelm is <u>NOT</u> being used to correlate a torque reading for testing. Torque wrenches shall not be used to determine the acceptability of bolted connections.

RECOMMENDATIONS FOR USING SKIDMORE WILHELM

- Determine the number of DTI's to be checked in device (3 for each lot for each size bolt.)
- Begin by assembling the bolt, nut, washer, and DTI in the device.
- Insert feeler gage (.005") into each of the gaps prior to beginning tensions to "get the feel".
- Make a match mark to confirm that there is no turning of the element against the washer.
- Tensioning of the bolt should be performed slowly.
- Tensioning should be performed with a manual wrench.
- Insert feeler gage at various tensions BELOW the minimum (Table 440-1) to determine that the protrusions are not prematurely compressed.
- Once required bolt tensions is achieved, the feeler gage should be inserted to ensure that the DTI gap refusal meets the requirements of Table 440-3.
- Once DTI performance has been confirmed, placement may begin in bolted assembly.

DTI's should be installed in strict compliance with manufacturer's written instructions. The preferred method of installation is with the DTI placed under the bolt head.

DTI's must NOT be reused. Inspection of the bolted connections is made by the use of the feeler gage (.005"). At least 10%, but no less than 2 bolts in each connection are inspected with feeler gages. All remaining bolts in each connection should be visually inspected for proper tightening.

440-9 SURFACE PREPARATION AND PROTECTION OF UNPAINTED STRUCTURAL STEEL

This article covers requirements for surface preparation in the fabrication shop and protection and cleaning in the field of unpainted structural steel.

All foreign matter, such as concrete drippings that gets on the steel, is to be removed as soon as possible by any of the methods indicated.

440-10 MEASUREMENT AND PAYMENT

Payment for structural steel is on a lump sum basis. Measurement for payment will not be made except when plan revisions affect the quantity required. When such revisions occur, adjustments in compensation will be made by supplemental agreement.

Except for materials estimates, progress payments for structural steel are not to be made until after erection of the structural steel. The prorated amount due should be based on the weight of structural steel erected during the estimate period.

Most paint systems used on structural steel require some field painting. When the paint system is included in the lump sum bid price for structural steel and there has been no field painting performed, an allowance must be made in the progress payment. Where only a small amount of field painting is required, 0.5% of the bid price is to be withheld for field painting. If structural steel is to remain unpainted, no reduction is to be made.

Progress payment amounts for field painting are to be based on the Resident Engineer's estimate of the percent of the work complete.

SECTION 442
PAINTING STRUCTURAL STEEL

442-2 MATERIALS

Paint materials shall be in accordance with Section 1080 of the Specifications. Paint will be inspected and sampled, either at the destination or at the point of origin. The Contractor shall not begin painting until the analysis of the paint has been performed, and the paint has been accepted. The Bridge Construction Engineer and the Materials and Tests Chemical lab should be consulted if questions.

442-5 PROTECTION OF WORK

The Contractor is required to protect all parts of the structure from disfigurement during the painting operation. He is also held responsible for damage to private property. Special care should be taken to protect concrete slope protection when spraying paint.

Dust control should be required when traffic causes contamination of the wet paint.

442-7 SURFACE PREPARATION

Blast cleaning will be required before the prime coat is applied. The surface needs to be clean and dry. With careful handling and storage, extensive cleaning after erection should not be needed. Normally, field cleaning consists of removing rust, dirt, dust, mortar drippings, and any other foreign material from the surface. As a general rule, the surfaces to be painted shall be washed to remove surface contaminants. It is very important that chloride and other salts be removed before overcoating previously painted surface. Although adequate cleaning is time consuming, **it is an absolute necessity**. The Technician shall insist on a clean, dry surface. The cleaning shall be completed and approved before painting is started. Simultaneous cleaning and painting in the same area is not to be permitted. Compressed air, vacuums, or bristle or wood fiber brushes are to be used to remove loose dust. Wiping with rags can damage the previously painted surface.

442-8 PAINT SYSTEMS

There are 4 paint systems listed in the Specifications. The contract Special Provisions should be checked for special paint systems not covered in the Specifications. If there are questions concerning the appropriate use of the various paint systems, contact the Materials and Tests Unit's chemical lab.

442-9 APPLICATION OF PAINT

Unless otherwise specified in the project Special Provisions, paint shall be applied by spraying except for minor repairs.

Application must be complete, smooth, and uniform. Runs and sags should be brushed out immediately, otherwise the paint is to be removed and the surface repainted. All cracks and crevices shall be completely sealed with paint. Special attention should be given to bolt heads, nuts, and edges to assure complete coverage.

Paint sprayers shall be kept in satisfactory condition to permit proper paint application. Sprayers not provided with traps or separators to remove water and oil from the compressed air are not to be used. The adequacy of these traps and separators can be checked by spraying only the air from the spray gun against a smooth surface. No water or oil should show on the sprayed surface. Continuous mechanical agitation of the paint in the sprayer containers is required to keep the paint properly mixed at all times during paint application.

When a stripe coat is required, insure that a 2 inch stripe of paint is applied by roller or brush to all exposed edges of the steel before applying the finish coat.

(B) APPLICATION CONDITIONS

Weather conditions for painting must meet the requirements of Article 442-5 of the Specifications before the Contractor is permitted to begin painting. Equipment and instructions on how to determine the dew point can be obtained from the State Materials Engineer.

Paint applied to very cold or very hot surfaces usually will not be satisfactory. Paint applied to damp surfaces is never satisfactory and shall not be permitted. Paint will not bond to a damp surface.

Except for application of touch-up primer, if a Contractor desires to paint between December 1 and May 1 of the following year, he shall make a written request to the Resident Engineer and state his proposed method of protecting the work. The Resident Engineer shall forward the request with his recommendations to the State Construction Engineer for approval. The seasonal limitations do not apply to application of touch-up primer; however, weather condition requirements do apply.

(D) MIXING PAINT

Usually paint is inspected and tagged prior to delivery to the job site. If this is not the case, it is not to be used until it has been tested and approved by the Materials & Tests Unit.

Paint must be thoroughly mixed just prior to use and as often in accordance with the manufacturer's product data sheet. Initial and intermittent mixing is to be done with mechanical mixers. Mixing only with hand paddles is not to be permitted. As a check on thorough mixing, a measured 1 gallon sample should be taken from the upper part of the container. If its weight is less than that shown on the container for this volume, additional mixing is required. If it is necessary to improve the workability, the paint may be heated in hot water or steam heaters. Neither the application of direct heat to the container nor the addition of any thinner will be allowed unless permitted in accordance with the manufacturer's instructions.

442-11 FIELD PAINTING

Contractors must hold a current SSPC QP1 certification to perform coatings work on bridge steel.

Field inspection shall be performed by a NCDOT certified Level 1 Coating Technician. Contact the Materials and Tests Unit’s Chemical Lab for more information.

Not only should each field coat of paint have a uniform appearance, but each coat shall have a minimum dry film thickness as required for the paint system. The thickness of each coat should be checked with a film thickness gauge to assure that proper coverage is being attained.

Surfaces to be encased in concrete do not require field painting except where shop paint has been damaged or was omitted because of bolted or welded connections.

Drying time for paint is dependent upon temperature, wind, and humidity. Special care shall be taken to assure that a coat of paint is not applied until the previous coat has thoroughly dried throughout the full thickness.

SECTION 450
PILES

450-1 DESCRIPTION

Bearing piles are used to support structures where dependable foundation materials are so far below the ground surface that spread footings are not economical. They transfer loads from the structure to the bearing material through skin friction, point bearing, or a combination of both.

Piles may be timber, steel, or concrete as indicated in the plans.

450-3 CONSTRUCTION METHODS

(B) PILE INSTALLATION

Piles should be driven to the accuracy shown in this specification. Pushing, pulling, bracing, or bending piles is not allowable to meet the accuracy requirements.

Preparation is very important in pile driving. A little extra time spent in preparation will ensure a proper pile installation.

The position of every pile is shown on the plans. Each pile should be located in correct position and is to be vertical or battered as specified. Flanges of steel H-piles are to be oriented as shown on the plans. The Contractor is responsible for pile layout and the Technician is responsible for checking the layout independently before pile driving is started.

Alignment of each pile should be checked before driving starts. Vertical piles can be checked in the leads with a plumb bob or carpenter's level. Battered piles can be checked in the leads using a triangular template, cut to the correct batter and a carpenter's level.

Certified welders will be required for welding points and splices on steel piles. When splicing steel piles, the welded butt splice details are shown on the plans. As an alternate, the Contractor may request to splice steel piles with an approved splicer.

(D) DRIVEN PILES

In order to prevent possible damage to concrete in the vicinity of pile driving operations from vibration or shock waves, piles are not to be driven within 50 feet of concrete having an age of less than 3 curing days unless otherwise approved by the Bridge Construction Engineer. There may be some types of soil or subsurface conditions where the 50 foot limitation should be increased. The Bridge Construction Engineer should be consulted when the need for deviating from the standard requirement is being considered.

Augers, churn drills, or spudding may sometimes be necessary to attain the required penetration. The augered or drilled hole shall not be larger than the diameter or largest cross-sectional dimension of the pile to be driven.

Piles are generally driven to bearing by drop, steam, air or diesel hammers. Drop hammers may be used only when permitted by the State Construction Engineer. The Contractor may request to use a vibratory hammer to begin the driving operations. This request should be forwarded to the Geotechnical Unit for approval along with other required driving methods and equipment. Pile

driving equipment should be adequate to drive the size and length piles required without causing damage to the piles. Heavier piles require pile hammers with higher energy ratings. Before pile driving is started, the Resident Engineer shall check to be certain that the pile hammer has been approved for use in accordance with Article 450-5 of the Specifications. Specifications for the pile hammer, cap block, and cushioning material are to be submitted to the Geotechnical Unit for review and approval. The data is to be submitted by the Contractor on the form contained on the Geotechnical Unit web page.

A pile driving memorandum will be furnished to the Resident Engineer by the Geotechnical Engineering Unit. The memorandum will provide specific information for the proposed pile hammer or hammers for specific foundation locations. Maximum and minimum penetration rates for 10 blows will be provided. Piles should be driven within these limits. Do not add any safety factors to these values. Do not drive piles to refusal unless the memorandum so directs. All necessary safety factors will be included by the Geotechnical Engineering Unit. Pay Record Book entries should not indicate an actual bearing value. The entry should indicate the required minimum blow count was achieved.

The Resident Engineer or his Technician shall inspect the equipment that the Contractor proposes to use prior to beginning pile driving operations to assure it is the same as was approved. Equipment shall be so designed and constructed that it will prevent lateral motion of the hammer and will support the pile during driving operations so that neither bending nor torsional stresses will be induced in the pile. If it is found during the driving operations that undesirable stresses or other damage is occurring, the Resident Engineer shall require the Contractor to stop his operations and obtain satisfactory equipment.

Steam, air, and diesel hammers are rated for energy at a specific speed. Check the blows per minute often to be sure they are operating at full capacity. All single acting hammers shall be equipped with a scale to determine the stroke; all double-acting hammers shall have a calibrated bounce chamber pressure gauge..

To utilize skin friction in the determination of bearing capacity, pile driving may be stopped and the piles allowed to sit undisturbed for a period of time. Minimum tip elevation, when required or minimum penetration into natural ground must be achieved prior to stopping driving operations. When pile driving operations are stopped prior to achieving the required bearing capacity, the piles must have a restrike or redrive to verify bearing. When the driving has been stopped by the Contractor to avoid driving more pile or having to splice additional length onto the pile, no payment will be made for the restrike. When the driving has been stopped at the direction of the Department, payment for the restrike will be made under Article 450-4.

(F) PILE DRIVING ANALYZER

The Geotechnical Operations Engineer should be advised when a PDA is to be run. The Operations Engineer will provide assistance and will review the test results.

450-4 MEASUREMENT AND PAYMENT

Once the required bearing and penetration has been achieved, the Contractor shall stop driving the pile. If the amount of pile above the cutoff elevation exceeds 5 feet, then the Contractor shall cut the pile off at cutoff elevation and no payment will be made for cutting the pile or for the cutoff portion.

However, if the amount of pile above the cutoff elevation is 5 feet or less, then the Contractor may drive the remaining portion of the pile to grade in lieu of cutting off the pile, provided the remaining portion of the pile can be driven without damaging the pile or reaching the maximum blow count or practical refusal. When this occurs the additional length of pile driven will be measured and paid as described in this section.

PILE DATA FORM

NORTH CAROLINA DEPARTMENT OF TRANSPORTATION

Pile Driving Data Form

Personnel: _____

Description: _____ Structure No.: _____

Project No.: _____ Station: _____ Initial Drive Date: _____

TIP No.: _____ Bent No.: _____ Restrike / Redrive Date: _____

County: _____ Pile No.: _____ Pile Length: _____

Pile Type: _____ Required Driving Resistance: _____

Reference Elevation: _____ Pile Cut-Off Elevation: _____ Jetting Elevation: _____

Ground Elevation: _____ Final Tip Elevation: _____ Embedded Length: _____

Hammer Manufacturer/Model: _____ Helmet Weight: _____

Hammer Cushion Material: _____ Pile Cushion Material: _____

Hammer Cushion Area: _____ Pile Cushion Area: _____

Hammer Cushion Thickness: _____ Pile Cushion Thickness: _____

Depth below Reference (ft)	Blows per Foot	Set for 10 Blows (in)	Driving Resistance (tons)	Remarks

DIVISION OF HIGHWAYS
DESIGN SERVICES
SOILS AND FOUNDATIONS DESIGN SECTION

PILE DRIVING EQUIPMENT DATA FORM

Project No.: _____ County: _____ Station: _____
TIP No.: _____ Contractor: _____
Description: _____

HAMMER COMPONENTS

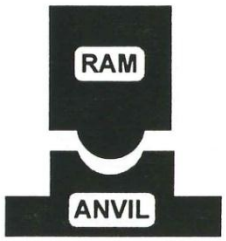

HAMMER
Manufacture: _____ Model: _____
Ram Weight: _____
Rated Energy: _____ at _____ (ft./m) stroke
Adjustable Stroke or Fuel Setting: _____
Maximun Operating Stroke: _____ (ft/m)
Modification: _____

HAMMER CUSHION
Material: _____
Thickness: _____ (in/mm) Area: _____ (in^2/cm^2)
Modulus of Elasticity: _____
Coefficient of Restitution: _____

PILE CAP
Helment Weight: _____ (kip/kN)

PILE CUSHION
Cushion Material: _____
Thickness: _____ (in/mm) Area: _____ (in^2/cm^2)
Modulus of Elasticity: _____
Coefficient of Restitution: _____

PILE TYPE
Description: _____
Length: _____ (ft/m) Area: _____ (in^2/cm^2)
Design Load: _____ (Ton/kN)

NOTES: _____

Submitted By: _____ Date: _____

DIVISION OF HIGHWAYS
DESIGN SERVICES
SOILS AND FOUNDATIONS DESIGN SECTION

PILE DRIVING EQUIPMENT DATA FORM

Project No.: 8.1234567 **County:** Peavey **Station:** 19+51.00 -L-

TIP No.: B-1234 **Contractor:** Big Bridge Contracting Company, Inc.

Description: Bridge at Smally Creek on NC 334

HAMMER COMPONENTS

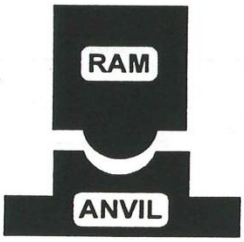

HAMMER

Manufacture: Delmag **Model:** D-22
Ram Weight: 4.91
Rated Energy: 40.61 Kip-ft **at** 8.27ft (ft./m) stroke
Adjustable Stroke or Fuel Setting: Fuel Setting 2
Maximun Operating Stroke: 7 Feet (ft/m)
Modification: None

HAMMER CUSHION

Material: Conbest
Thickness: 4.5 in (in/mm) **Area:** 324 in^2 (in^2/cm^2)
Modulus of Elasticity: 280 Ksi
Coefficient of Restitution: 0.80

PILE CAP

Helment **Weight:** 3.6 Kips (kip/kN)

PILE CUSHION

Cushion Material: Plywood
Thickness: 4 in (in/mm) **Area:** 400 in^2 (in^2/cm^2)
Modulus of Elasticity: 30
Coefficient of Restitution: 0.50

PILE TYPE

Description: 20 inch P/S Concrete Piles
Length: 40 feet (ft/m) **Area:** 400 in^2 (in^2/cm^2)
Design Load: 60 Tons (Ton/kN)

NOTES:

Submitted By: B. G. Superintendant **Date:** 7/31/98

SECTION 452
SHEET PILE RETAINING WALLS

452-1 DESCRIPTION

Temporary sheet piles are often used in the construction of structures for cofferdams or to retain soil material when excavating. This article concerns permanent sheet piling that is specified on the plans. Sheet piling will usually be used to construct bulkheads at the ends of coastal bridges over water.

SECTION 460
BRIDGE RAILING

460-1 DESCRIPTION

In addition to serving as a traffic barrier, a bridge railing also produces a pleasing appearance in the finished bridge. To accomplish this, special care must be given to the vertical and horizontal alignment of the rail.

Bridge railings may be either metal, pipe, or concrete barrier as indicated on the plans.

460-3 CONSTRUCTION METHODS

(A) METAL RAIL

Metal rail may be either aluminum or galvanized steel at the Contractor's option provided the same material is used throughout the project.

Care is required in setting anchor bolts or inserts to assure proper fit of the rail posts with special attention given to bolt projection and position of the inserts with respect to the concrete surface. For formwork supporting inserts to be cast in the concrete parapet, the Contractor should provide air bleed holes or otherwise ensure that the concrete under the forms achieves proper consolidation and is free of honeycombs and air pockets. Minor surface defects can be rubbed out with non-shrink grout. Areas with severe honeycombing should be chipped out to provide vertical edges and poured back with the same class of concrete used in the parapet. In both cases, the repaired areas should be properly cured to eliminate shrinkage cracks from occurring.

If necessary to attain proper post alignment, shims of the same material as used in the post will be required; however, every effort should be made to construct the concrete surfaces true to line and grade to prevent the necessity of shims.

Corrosion at the base of rail posts is a critical problem. Aluminum post base surfaces in contact with concrete shall be thoroughly coated immediately before installation with an aluminum impregnated caulking compound approved by the Materials & Tests Unit.

(B) PIPE RAIL

Pipe rails are fabricated from galvanized pipe and are to be given one field coat of zinc-rich paint after erection. Field welding other than that shown in the plans will not be permitted. Other types of pipe rail may be required in the Special Provisions.

(C) CONCRETE BARRIER RAIL

Concrete barrier rails are usually slip formed using a self-propelled extrusion machine. However, they are sometimes constructed using conventional forms.

Vertical and horizontal alignments for slip formed barrier rails are controlled with a sensing device utilizing a fixed string line or mobile track system or string line. Overlapping applications of a 10 feet straightedge shall be used to check a tolerance of ¼" in 10 feet for both vertical and horizontal deviations directly behind the slip forming machine.

Joints are to be finished to a neat vertical line and free of any excess concrete on slip formed rails. The required broom or brush finish should be in the horizontal direction.

Construction elevations for formed barrier rails should be used to grade the top of rail. Rail graded from a fixed distance above the deck or overhang will produce a line that is not smooth for the entire length. Forms that are bent or warped are not to be permitted. Defects on the inside surface of forms which would visibly affect the appearance of the finished product shall be repaired prior to use.

SECTION 462
SLOPE PROTECTION

462-1 DESCRIPTION

This article of the Specifications governs the construction of slope protection under the ends of bridges or other locations in accordance with details as shown in the plans. Unless otherwise noted in the plans, slope protection shall consist of cast-in-place reinforced concrete..

462-3 CONSTRUCTION METHODS

The Technician should refer to the appropriate plan standard before initiating this phase of construction. It is crucial in this phase of construction that adequate compaction be obtained prior to placement of concrete. Proper compaction is also crucial for stone protection; however, the bottom layer of slope protection should have embedded particles of stone for overall stabilization. For proper compaction of earth material and stone placement, tamping is normally required. Areas to receive concrete or stone slope protection shall be checked on the plans to determine the top berm clearance and width. Special details for outside edge and any toewalls are indicated on the plans. The Resident Engineer should be contacted for any questions regarding toewall, berm, or outside edge construction.

Concrete slope protection is generally placed by forming and pouring alternate sections of plan width from bottom to top to facilitate finishing, and then after these cast sections are cured, remaining sections are placed. The Technician should continuously check during the casting operation to assure the wire mesh reinforcement is being substantially held in the required plan location. Horizontal joints in a bay of slope protection concrete should not be permitted unless absolutely necessary. To prevent shrinkage cracks, care should be taken to wet the surface beneath the slope protection prior to placing concrete. This will prevent the substrate from wicking moisture from the fresh concrete.

The surface of concrete slope protection shall not vary more than 1/2-inch in a distance of 10 feet.

Expansion joint material is required where slope protection abuts the structure to include end bent and columns.

Special attention should be given to ensure the bridge substructure is not damaged during slope protection construction. The Technician should check drainage adjacent to slope protection to assure siltation, discoloration, erosion, and undermining is not occurring. This requires continuous inspection and proper maintenance by the Contractor. In the event erosion under slope protection occurs, proper compaction must be obtained when this slope protection is backfilled.

TECHNICIAN'S CHECKLIST
PILE DRIVING

1) Thoroughly review plans, specifications, and any applicable special provision and subsurface information.
2) Inspect piles at delivery for proper pick up and storage.
3) Upon receipt of piles, check paperwork and fill out a Material Received Report.
4) Ensure piles are of correct size and type for the project.
5) Insect concrete piles for damage such as cracking and spalling. Ensure piles contain CaNO2 and pile tips if required.
6) Inspect piles for damage. Check piles for coating application and damage. If required, ensure pile driving equipment matches equipment submitted. Check pile hammer type and model, hammer and pile cushions.
7) Ensure pile driving operations are not precluded by any seasonal limitations or any other permit conditions.
8) Review stakeout with the Contractor. Ensure Contractor understands any offsets from the reference lines.
9) If driving concrete piles through embankment, check auguring requirement in the Specifications.
10) If driving piles in water, check to see if turbidity curtain is required.
11) Check pile driving template, if used, to ensure correct location of piles.
12) Ensure pile tips, if required, are used.
13) Ensure all welding is performed by a certified welder.
14) Check plans to see if Pile Driving Analyzer is required. If required, notify the Geotechnical Unit several days prior to anticipated driving.
15) If driving test piles, measure and mark piles. Record driving information on Test Pile Data table and forward information to Geotechnical Unit.
16) Ensure proper orientation of H-piles.
17) Record length, heat numbers (if applicable), and location of each pile.
18) Ensure hammer has jumpstick attached to enable observation of hammer stroke.
19) Prior to and during driving, ensure leads are aligned with the pile.
20) Prior to, during, and after driving, check pile for plumbness or batter.
21) During driving, observe hammer for proper operation. Do not allow excessive stroke or exceed maximum blow count.
22) Obtain additional driving tables if the actual hammer stroke does not match table information.
23) During driving, observe pile for rebound or other driving irregularities or pile damage.
24) Record penetration of last 10 blows for determination of bearing capacity.
25) Set or check pile cut-off elevation and record cut-off for determination of pay length.
26) Inspect pile splices to ensure compliance with the pile splice details in the plans. Welding must be performed by a certified welder using approved rods and procedures.

27) Prior to becoming inaccessible, holes in piles used for lifting purposes must be repaired if the damaged section is not to be encased in concrete or if the hole is less than 10' below ground surface.
28) Notify RE if minimum embedment or minimum tip elevation cannot be obtained.
29) Observe and record details of jetting operations if used for pile installation.
30) Inspect piles after driving for damage to piles or applicable coatings.

TECHNICIAN'S CHECKLIST
SUBSTRUCTURES

1) Ensure all excavation is performed in accordance with applicable permits.
2) Ensure Contractor has a "competent person" on site whenever personnel are in an excavation.
3) Follow all safety regulations and procedures pertaining to excavations including sloping or shoring excavation, ingress/egress, fall protection, and confined spaces.
4) Check for utility conflicts in areas of excavation.
5) For spread footings, check bearing capacity of the bottom of excavation with sounding rods. Check for any requirements for the footing to be "keyed into" or "carried into" rock.
6) For pile supported footings, check on need for foundation conditioning material.
7) When dewatering an excavation, direct water into an approved erosion control device such as a stilling basin or silt bag.
8) Check forms for size, line and grade, squareness, cleanliness, condition, motar-tightness, chamfered edges, and oiling.
9) Fill out Materials Received Report for all materials to be permanently incorporated into the structure.
10) Check reinforcing steel for proper storage.
11) Sample and test reinforcing steel and bar supports.
12) Check reinforcing steel size, type, placement, tying, clearance, splicing, and support.
13) Inspect epoxy-coated steel for damage and repair as necessary.
14) Identify and prepare areas for concrete testing and cylinder storage.
15) Ensure Contractor has an adverse weather plan prior to placing concrete.
16) Ensure a certified concrete Technician performs concrete testing.
17) Ensure existing concrete is kept wet for a minimum of 2 hours prior to placing adjacent concrete.
18) Check weather forecast to anticipate the need for cold weather placing requirements and cold weather protection of concrete.
19) Observe concrete placement for conformance with the specifications.
20) Ensure the Contractor adheres to restrictions for removal of forms and restrictions for placing loads on structural members.
21) Check for proper type, adequacy, and timelines of application for curing of concrete.
22) Ensure finishing to the specified class begins upon removal of forms. Notify RE if not begun within a reasonable period.
23) Inspect columns prior to casting checking steel clearance, plumbness, adequacy of bracing, and condition of forms.
24) Set or check elevation of top of column forms and calculate cut down to top of concrete.
25) Check anchor bolts prior to casting caps for correct length and size, projection, location, and plumbness. Check span length between anchor bolts.

26) Check grout pots, if used, prior to casting cap for location and orientation. The fill tube must be accessible after setting girders.
27) Set and check bridge seat elevations prior to and after casting caps.
28) Check finishing of concrete seats.
29) Check application of epoxy coating on top of caps when required.
30) Check bearings and sole plates for proper type, location, and orientation.
31) Fill any annular space resulting from driving operations with granular material.

TECHNICIAN'S CHECKLIST
SUPERSTRUCTURE

1) Ensure all operations are performed safely in respect to crane safety and fall protection.
2) When working over or adjacent to a travelway or navigable waterway, ensure all operations are performed in accordance with the approved protection of traffic plan.
3) Mark or check marks at the 10th points on girders.
4) Check for calibration of torque wrenches and tension indicating devices.
5) Observe bolting of connections to ensure proper bolting procedures.
6) Check DTI's for proper compression.
7) Ensure bearings are set properly taking into to account any temperature or end rotation. Corrections may be shown on the plans for port bearings.
8) Ensure grout and any coatings have been removed from bearing plates and girders prior to welding. Check for welder certification, weld sizes, and use of temperature pens when welding girders to bearing plates.
9) Notify M&T to come inspect metal Stay In Place (SIP) forms when they are delivered to the project.
10) Calculate, set, and check buildups as needed.
11) Check for "no weld zones" on the top flange of continuous steel bridges.
12) Check grade and alignment of overhangs.
13) Ensure overhangs are constructed in accordance with approved drawings.
14) Ensure all prestressed members are stamped "Approved."
15) Check rebar and supports for size, location, and spacing.
16) Check utility hanger deck insert locations.
17) Check deck drain locations.
18) Check location and elevation of headers and deck thickness at header location.
19) Observe screed dry run.
20) Ensure Contractor follows deck pouring sequence.
21) Ensure Contractor has made adequate preparations in advance of deck pours.
22) Check for adequate water supply, test source if not obtained from a municipal supply.
23) Ensure Contractor has adequate supply of curing materials and insulation if needed.
24) Wet prestressed deck panels a minimum of 2 hours prior to pour.
25) During deck pours, test concrete, observe placement, perform depth checks, observe straightedging, fogging, and curing.
26) Perform camber checks during pour.
27) Sound bottom of SIP forms after deck pouring is complete.
28) Perform or check rolling straight edge on completed deck surface.
29) Observe deck grooving. Ensure specified dimensions are obtained.
30) Check for proper joint installation procedures. Observe watertight integrity test if applicable.

31) Check barrier rail for steel size and location, alignment, construction joints, guardrail attachment, and cover plates.
32) Check for adequate drainage and erosion control at the ends of the bridge.
33) Ensure Contractor follows specifications for placing loads on structural members.

FINAL INSPECTON CHECKLIST

(A) BRIDGES

1) Have expansion joint seals been properly installed? When required in the Special Provisions, has watertight integrity test been made and recorded in the diary?
2) Check deck drains and closed drainage system where required for condition.
3) Has deck passed rolling straightedge?
4) Are curb and rail grades and alignment acceptable?
5) Has concrete been finished in a satisfactory manner?
6) Are chamfers sharp and uniform in appearance?
7) If rail is metal, check grades, alignment, and anchor bolts for tightness. Also verify that aluminum impregnated caulking compound has been installed under the post base.
8) Are alignment and grade of overhangs satisfactory?
9) Check field connections of structural steel by visual inspection.
10) Check paint system on beams for cover, smoothness, uniformity, sags, and discolorations.
11) Check anchor bolts for burring of threads on fixed ends of nuts.
12) Check bearing plates to be sure they are properly aligned, clean, and painted when required.
13) Check exterior surfaces of girders for cleanliness and appearance.
14) Check tie rod nuts and washers for paint (use brush on zinc rich paint).
15) Check rip rap or slope protection for plan requirements and appearance.
16) Locate drains for reinforced bridge approach fills and ensure outlets are not crushed or blocked.
17) Check cleanup and clearing around bridge site.
18) If a railroad is involved, notify its representative prior to the final inspection to obtain any requested punch list items.

(B) BOX CULVERTS

1) Check to see that all form ties and nails have been properly removed.
2) Check all exposed concrete surfaces for proper finish.
3) Check headwall and wings and repair any damage from backfill or other grading operations.
4) Check weep holes to see that they are functioning.
5) Check for obstructions to stream flow in culvert and adjacent to the ends.
6) If precast, ensure proper fit up and that backfill material can not be lost through the joints.

Check for proper site cleanup.

NOTICE OF NEW STRUCTURE COMPLETION

The Structures Management Unit (SMU) maintains an inventory of new and replacement structures. In addition, SMU is required to make an initial inspection of the new structures within 90 days of opening the structure to traffic, to comply with the National Bridge Inspection Standards (NBIS). To assist in making sure SMU includes all new and replacement structures to the inventory and the structures are inspected prior to opening to traffic, the field personnel administering the contracts with new or replacement structures (i.e. Division Engineers, Resident Engineers, Bridge Maintenance Engineers, etc.) shall notify SMU of the anticipated construction completion date and the anticipated date of opening to traffic of the structure, as soon as practical prior to completion. This allows inspection crews the opportunity, when applicable, to schedule and perform the initial inspection of the structure before opening to traffic and the inventory recording to be completed. The types of structures for which SMU should be notified are bridges, culverts, pipes and sign structures. SMU has developed a set of notification procedures for bridge construction and the completion of structures for Centrally Let, Division Let, Division Constructed and Municipal projects.

Centrally Let Projects:

When a new structure or replacement structure is near completion and the Resident Engineer can provide a realistic anticipated completion date and open to traffic date, he shall complete the "Notice for Completion of Structure Work" and submit it to SMU's Structure Inventory & Appraisal (SI&A) Officer. This form is included at the end of this section. An electronic version of this form is located on the Construction Unit's web page under Construction Resources/Construction Forms.

Division Let, Division Constructed and Municipal Projects:

SMU may not be aware of Division Let, Division Constructed and Municipal Projects as the design and letting is usually managed by the Division or by the municipality. Therefore, the Division Engineer (or his delegate) is responsible for notifying SMU of contract award and completion of the structure. The process is as follows:

Award of Contract

For Division Let projects, provide a copy of the "Notification of Award" letter to the SMU's Structure Inventory & Appraisal (SI&A) Officer and the Working Drawing Review Project Engineer. This will serve as a notice to SA&I that an inventory record will need to be updated and notice to the Working Drawing group for any upcoming contractor submittals.

Notice for Completion of Structure

When the anticipated date for completion of structure and opening of traffic is known, the "Notice for Completion of Structure Work" form should be submitted to SMU's SI&A Officer and Bridge Inspection Superintendent.

Transmittal of As-Built Plans at Final Acceptance

When the Division Engineer sends the "Final Acceptance Letter" to the Contractor, provide a copy of the letter and a set of as-built plans to SMU's SAI&A Officer. This information will be scanned into BridgeDocs for the purpose of maintaining proper documentation of structures currently in service.

Construction By Division

For new or replacement structures constructed by Division forces, notify SMU's SI&A Officer when the replacement work has been completed and, when applicable, submit a set of as-built plans.

NOTICE OF NEW STRUCTURE COMPLETION

Instructions

- **For new bridges or sign structures: Complete form as soon as an estimated completion date is known. If the anticipated date of opening to traffic is unknown, leave blank and send a revised form when the date is known.**
- **Provide as much information as possible to identify the structure location.**

Submit to: Structure Inventory and Appraisal Officer / SMU
Bridge Inspection Superintendent
Copies to: Division Engineer, State Construction Engineer

Reported By: _____ Date: _____

Division: _____ County: _____

Bridge #: _____ TIP Project #: _____

Location: Structure on _____ over _____
between _____ and _____

Additional Information Regarding
Location:_____
_____
_____

Check below where applicable:

- ❑ Bridge
- ❑ Overhead Sign Structure
- ❑ Cantilever Sign Structure
- ❑ Other – explain _____

Anticipated Date of Structure Completion: _____

Anticipated Date of Opening to Traffic: _____

RESIDENT ENGINEER'S NOTICE OF VERTICAL CLEARANCE CHANGE

The Structures Management Unit (SMU) is required to maintain a database of the vertical clearances on all roadways. The database is used to evaluate proposed routes for oversized loads. To assist in making sure SMU has the most current information; Resident Engineers should report any changes (increases and decreases) in overhead clearances. Reported changes include vertical clearances for new bridges and sign structures, new vertical clearances due to construction or resurfacing under existing structures and removal of existing structures. The reported changes should be submitted to SMU's Structure Inventory and Appraisal Officer on a "Resident Engineer's Notice of Vertical Clearance Change" form. A sample of this form is included at the end of this section. An electronic version can be located on the Construction Unit web page under Construction Resources/Construction Forms.

Specific reporting times are required for each type of construction listed below.

Type of Construction	**When to Report**
New Bridges and Sign Structures	Immediately after erected
Under Existing Structures	When work is complete
Removal of Existing Structure	When overhead obstruction is removed

RESIDENT ENGINEER'S NOTICE OF VERTICAL CLEARANCE CHANGE

Instructions

- **For new bridges or sign structures:** verify and report plan minimum vertical clearance immediately after members are erected.
- **For construction or resurfacing under existing structures:** report when work is complete.
- **For divided multilane facilities:** provide minimum clearance values for each direction of travel. Also, list collector / distributor lanes separately.
- **For removal of existing structures:** report when the existing overhead obstruction is removed
- Report values in English Units and round down to the nearest inch.
- Bridge # is the Bridge Maintenance number shown on the plans.
- **Provide as much information as possible to identify the structure location.**

Submit to: Structure Inventory and Appraisal Officer / SMU

Copies to: Division Engineer
State Construction Engineer
Assistant State Structures Engineer / Inspections
Director Oversize/Overweight Permit Unit

Reported By: _____ **Date:** _____

Division: _____ **County:** _____

Bridge #: _____ **TIP Project #:** _____

Location: **Structure on** _____ **over** _____
between _____ **and** _____

Additional Information Regarding Location:_____
_____
_____

Check below where applicable:

- ❑ Bridge
- ❑ Overhead Sign Structure
- ❑ Cantilever Sign Structure
- ❑ Resurfacing
- ❑ Other – explain _____

Measured Vertical Clearance: _____

Plan Minimum Vertical Clearance: _____